METAL BUILDING ERECTION AND SAFETY MANUAL

IMPACT BUILDING SYSTEMS, Inc.

ImpactBuildings.com

TABLE OF CONTENTS

INTRODUCTION 7.1-2

1.0 FOUNDATION AND BUILDING ANCHORAGE
- 1.1 General Foundation Information 7.1- 3
- 1.2 Foundation Checking Procedure 7.1- 4
- 1.3 Anchor Bolt Settings 7.1- 5

2.0 PRE-ERECTION
- 2.1 Access to Site 7.1- 6
- 2.2 Unloading Operations 7.1- 6
- 2.3 Location of Building Parts 7.1- 8

3.0 UNLOADING HANDLING AND STORAGE
- 3.1 Structural 7.1- 10
- 3.2 Wall and Roof Panels 7.1- 11
- 3.3 Unloading 7.1- 13
- 3.4 Cable Information 7.1- 14
- 3.5 Structural Framing Precautions 7.1- 15

4.0 ERECTION OF PRIMARY AND SECONDARY STRUCTURES
- 4.1 General Information. 7.1- 16
- 4.2 Recommended Tools 7.1- 17
- 4.3 Unloading Framing 7.1- 21
- 4.4 Raising Rigid Frame 7.1- 22
- 4.5 Connection Bolts 7.1- 25
- 4.6 Completing and Plumbing the First Bay 7.1- 35
- 4.7 Erecting the Column and Beam Endwalls 7.1- 37
- 4.8 Erecting the Remaining Frame 7.1- 38
- 4.9 Wind Bracing Installation 7.1- 40

5.0 SHEETING
- 5.1 General Information 7.1- 43
- 5.2 “R” Panel 7.1- 44
- 5.3 “PBR” Panel 7.1- 45
- 5.4 “AW” Panel 7.1- 46
- 5.5 Roof and Wall Fasteners 7.1- 47
- 5.6 Fastener Installation 7.1- 48
- 5.7 Aligning the Girts 7.1- 51
- 5.8 Wall Insulation 7.1- 52
- 5.9 Roof Insulation 7.1- 54
- 5.10 Installation of Wall Panel 7.1- 57
- 5.11 Safety Precautions For Roofing Works 7.1- 59
- 5.12 Prepairing the Eave 7.1- 61
- 5.13 Installation of the First Roof Panel 7.1- 63
- 5.14 Sealing the Sidelap 7.1- 65

5.15 Sealing The Eave 7.1- 66
5.16 Sealing the Endlaps 7.1- 67
5.17 Panel Endlaps 7.1- 68
5.18 Roof Sheeting Sequence 7.1- 69
5.19 Installation of Roof Panels 7.1- 70
5.20 Peak Panel Installation 7.1- 71
5.20 Skylight Installation 7.1- 72
5.21 Tape Sealant Application at Ridge Flashing 7.1- 73

6.0 FLASHING, GUTTER AND TRIM
6.1 Gutter Installation 7.1- 75
6.2 Rake Trim and Peak Box Installation 7.1- 77
6.3 Flashing Caulk and Lap Details 7.1- 78

Technical information contained herein is subject to change without notice.

IMPORTANT!

READ AND UNDERSTAND THIS PAGE BEFORE PROCEEDING WITH ANY WORK OR FURTHER READING

SAFETY FIRST

Manufacture, has a commitment to manufacture quality building components that are designed to meet the structural requirements of the building. However, the safety commitment and jobsite practices of the erector are beyond the control of Manufacture.

It is urgently recommended that the safe working conditions and accident prevention practices be the top priority on the job site and that local, state and federal safety and health standards always be followed to help insure worker safety. These points cannot be stressed too strongly.

Jobsite safety is a joint responsibility of all parties present on the jobsite, including owners, architects, engineers, contractors, subcontractors, delivery personnel, and employees of all the above, among others. All should be watchful to avoid hazards which might cause damage to property or injury to any person, including themselves.

Always make certain all employees know the safest and most productive way of erecting a building along with emergency telephone numbers, location of firstaidstationsandemergencyprocedures.Avoidworking during inclement weather periods when personnel are at risk due to high winds, lightning, precipitations, etc. Manufacture recommends daily meeting highlighting safety procedures, the use of hard hats, rubber sole shoes for roof work, proper equipment for handling material and appropriate safety gear, including nets where necessary.

This manual should be interpreted and administered with sound judgement consistent with good safety practices. Its information is to be disseminated to all workers on the jobsite. Where any doubt exists as to language or direction of this manual, do not take a risk, “play it safe”.

ALL DETAILS, RECOMMENDATIONS AND SUGGESTIONS IN THIS MANUAL ARE FOR GENERAL GUIDELINES ONLY, AND NOT MEANT TO BE ALL INCLUSIVE. INDUSTRY ACCEPTED INSTALLATION PRACTICES WITH REGARDS TO ALL AREAS NOT SPECIFICALLY DISCUSSED IN THIS MANUAL MANUAL SHOULD BE FOLLOWED. ONLY EXPERIENCED, KNOWLEDGEABLE ERECTORS FAMILIAR WITH ACCEPTED PRACTICES SHOULD BE USED TO ASSURE A QUALITY PROJECT.

INTRODUCTION

Manufacture, manufactures high quality, pre-engineered metal building packages. Quality erection is essential to complete the structure to the satisfaction of the customer.

This manual has been prepared to help guide the erection process and reflects the techniques in use in the metal building industry believed to be most representative of good erection practices. These procedures and methods are by necessity general in nature. The erector should always, especially in special circumstances, use proven and safe erection methods.

This erection manual is intended only as a supplement to the erection drawings that are furnished with each building. The erection drawings show the customer's building as engineered and fabricated according to his requirements. The building erection drawing will always govern with regard to construction details and specific building parts. Contact your sales representative to resolve any matters not addressed.

The information contained in this manual is believed to be reliable, however, Manufacture disclaims any respon-sibility for damages which may result from use of this manual since the actual erection operations and conditions are beyond IMPACT BUILDING SYSTEMS's control. **Only experienced, knowledgeable erectors with trained crews and proper equipment should be engaged to do the erection.**
It is emphasized that RIGID is **only a manufacturer** of metal buildings and components and is **not engaged in the erection** of its products. Opinions expressed by Manufacture about erection practices are intended to present only a guide as to how the components could be assembled to create a building. The experi-ence, expertise and skills of the erection crews as well as the equipment available for handling the materi-als determines the quality and safety of erection and the ultimate customer satisfaction with the completed building.

The MBMA's **"CODE OF STANDARD PRACTICE"** shall govern with respect to the fabrication tolerances, erection methods, and all field work associated with the project in question

The erector should familiarize himself with the contents of this document. Additional copies may be re-quested at a nominal cost.

Technical information contained herein is subject to change without notice.

1.0 FOUNDATION AND BUILDING ANCHORAGE

1.1 GENERAL FOUNDATION INFORMATION

Manufacture recommends that all building foundations, including pier sizes, grade beams and floor slabs, be designed by an experienced local foundation engineer. This engineer can also recommend excavation procedures, drainage practices, form work, reinforcing steel requirements and concrete proportioning. This will assure proper designs, expedite the work and reduce costs.

Proven construction techniques should be adhered to in the foundation work. The bottoms of all excavations should be level and smooth, and care should be taken to prevent cave-ins when utilizing the walls of the excavations for concrete forms. Strict adherence to OSHA and other local codes or laws governing shoring of excavation to prevent accidental cave-ins" is critical. Where the ground surface is not level, the bottoms of the foundations should be in steps coinciding with the piers (as shown). Fill areas should be properly compacted to prevent settling cracks. Footing should extend below any fill material.

Care should be taken to obtain a good finish on the floor slab and to maintain the correct elevation throughout the slab. Shrinkage cracks can be minimized by pouring the slab in alternate sections, "checker board fashion". The outer corners of the foundation walls and piers should be sharply formed with straight sides and level tops. This will allow neat seating and good alignment of the base angle.

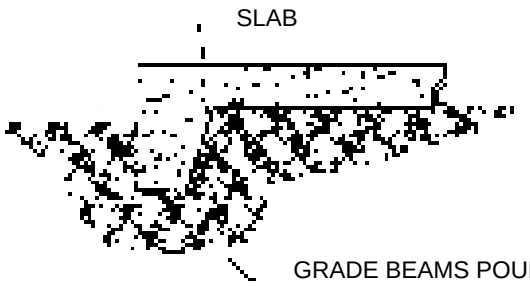

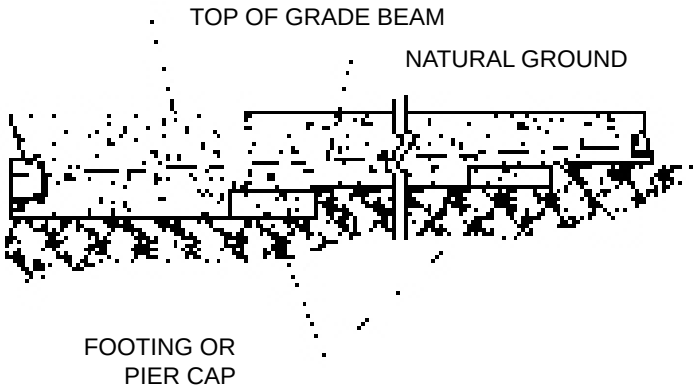

1.2 FOUNDATION CHECKING PROCEDURE

The importance of accurate foundation construction and anchor bolt settings cannot be over-emphasized. Foundation errors and mislocation of anchor bolts are among the most frequent and troublesome errors made in metal building construction. The Following procedures and methods, should help to minimize these costly errors and delays.

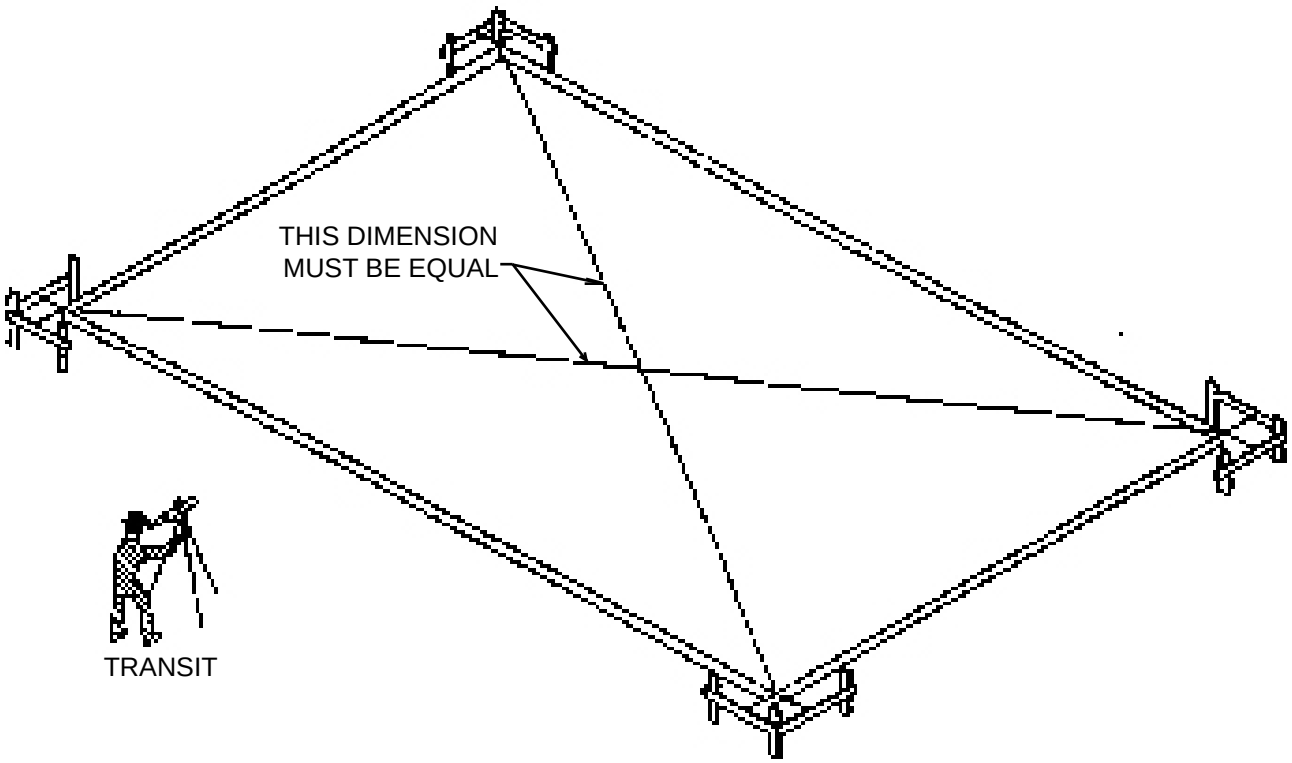

1. To determine that the foundation is square, measure diagonal dimensions to be sure they are of equal length.

2. To determine that the foundation is level, set up a transit or level and use a level rod to obtain the elevation at all columns and posts.

3. Carefully check the location of all anchor bolts against the “Anchor Bolt” drawing fumished by Manufacture. All dimension must be identical to assure proper start-up.

Technical information contained herein is subject to change without notice.

1.3 ANCHOR BOLT SETTINGS

It is extremely important that anchor bolts be placed accurately in accordance with the anchor bolt setting plan. All anchor bolts should be held in place with a template or similar means, so that they will remain plumb and in the correct location during placing of the concrete. Check the concrete forms and anchor bolt locations prior to the pouring of the concrete. **A final check should be made after the completion of the concrete work and prior to the steel erection.** This will allow any necessary corrections to be made before the costly erection labor and equipment arrives.

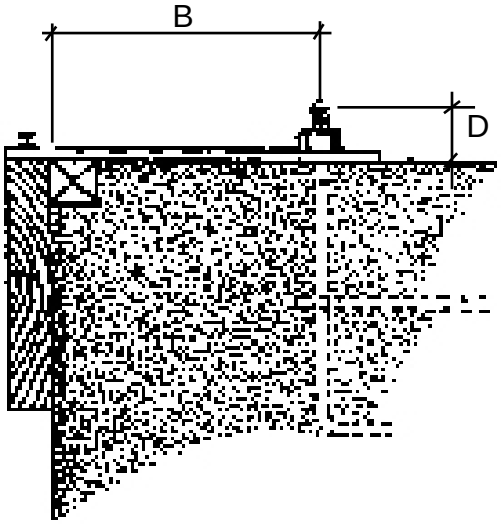

PROJECTION ON ANCHOR BOLTS "D" GIVEN ON PLAN

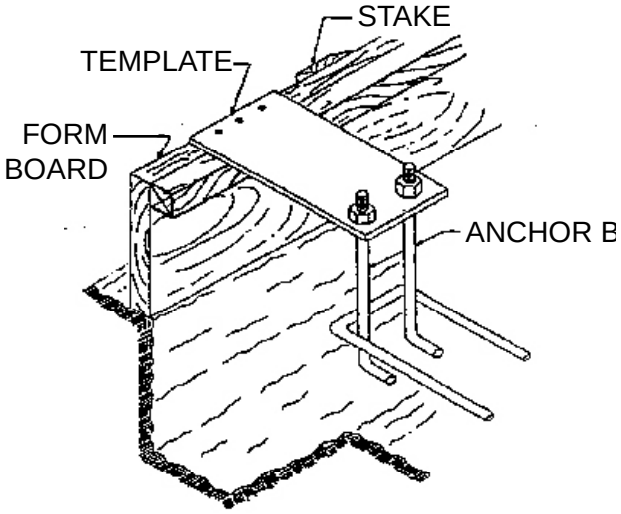

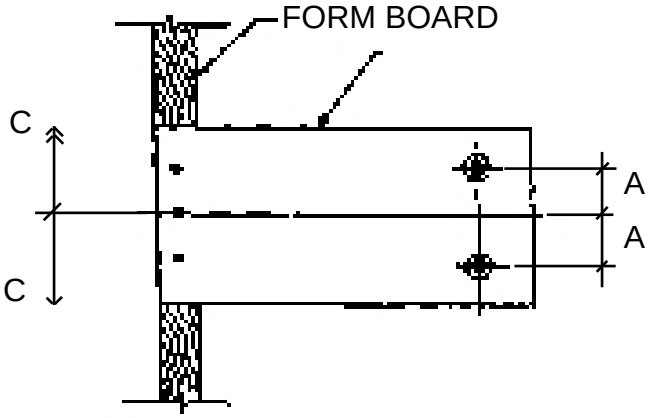

DIMENSIONS A, B, AND C AS GIVEN ON ANCHOR BOLT SETTING PLAN

2.0 PRE-ERECTION

2.1 ACCESS TO SITE

The vehicle transporting your building parts must gain access to the building site from the adjacent highway or road. Such access should be studied and prepared in advance of arrival. All obstructions, overhead and otherwise, must be removed and the access route graveled or planked if the soil will not sustain the heavy wheel loads.

Inspect to insure that there is enough room to physically perform the tasks required to erect the building. Application of sheeting and trim can be expensive when there is not sufficient working space because of the proximity of adjacent buildings or other obstructions.

The availability of any required utilities should also be considered in advance. Take careful note of any overhead electric lines or other utilities to avoid hazards and damage (Notify your utility company when necessary)

Develop a comprehensive safety awareness program in advance to familiarize the work force with the unique conditions of the site, and the building materials, along with the appropriate “Safe Work’ practices that will be utilized.

NOTE!
Complete sets of erection drawings are furnished with every building.
Each plan is specially prepared for each individual building and should be strictly adhered to. ***Familiarize yourself and crew with these drawings prior to start-up.***

2.2 UNLOADING OPERATIONS

Pre- planning of the unloading operations is an important part of the erection procedure. This involves careful, safe and orderly storage of all materials. Detailed planning is required at the job site where storage space is restricted. Here, a planned separation of materials in the order of the erection process is necessary to minimize the costly double handling of materials. While set procedures are not possible in all cases, special attention should be given to the following items.

Note:
IMPACT BUILDING SYSTEM trucks are loaded to maximize efficiency, maximize trailer weight, and insure safety. Unfortunately, **Manufacture can not load trucks per customer request.**

Technical information contained herein is subject to change without notice.

<<< THINK SAFETY AT ALL TIMES >>>

1. Location of carrier vehicle during unloading.

Unload material near their usage points to minimize lifting, travel and rehandling during building assembly.

2. Prepare necessary ramp for truck

The edges of the concrete slab should be protected to minimize the danger of chipping or cracking from truck traffic if the materials are to be laid out on the slab. One important safety consideration is the fact that materials stored on the slab may subject the workers to possible injury from falling objects.

3. Schedule lifting equipment (not by Manufacture)

The type and size of lifting equipment is determined by the size of the building and the site conditions. Length of boom, capacity and maneuverability of lifting equipment will determine its location for both unloading and erection.

Use the same lifting equipment to unload and erect structural parts. Lifting equipment costs are usually minimized by combining the unloading process with building erection. As soon as the truck is unloaded, the lifting equipment should start erecting the columns and raising the asembled rafters into position.

4. Consideration of overhead electric wires

Overhead power lines are a continuing source of danger. Extreme care must be used in locating and using lifting equipment to avoid contact with power lines.

5. Schedule crew

Depending on the crew size, valuable time can generally be gained if the supervisor plans and watches ahead instead of getting tied up with a particular unloading chore.

6. Check shipment

When shipments are received in the field, two inspections are necessary:

a. When items, boxes, crates, bundles or other large components are received and unloaded from the carrier, they should be checked off from the packing list.

If during the inspection, damages, or shortages of items are found, a report should be filed with the carrier immediately at the site. When damages are evident from the exterior of containers, they should be opened and inspected thoroughly at the time of receiving shipments. Panel crates should be opened and inspected for water damage. Galvanized or galvalume panel crates should always be opened and inspected for white or black rust.

b. When bundles, crates, cartons, boxes, etc. are opened following delivery, another check must be performed to determine the quantity received and their condition.

If during this inspection damages or shortages of items are found upon opening the crates or cartons, a written claim should be sent to the carrier no later than fourteen (14) days after delivery. If a shortage is discovered within a container, then a written notice should be mailed to RIGID at the same time the claim is sent to the carrier.

Unless these two important inspections are made and any reports or claims are filed immediately, settlements become very difficult and usually all parties suffer the loss.

NOTE:
Even when IMPACT BUILDING SYSTEM trucks are involved in the delivery, careful attention should be paid to the material, and claims filed in the same timely manner.

When fi ling claims either with the carrier, or with Manufacture, the claim should indicate the item(s) in question, the bundle or container in question (if any), the actual quantity received, the quantity which should have been received, or that which was damaged. This is important for quickly retrieving the necessary information. Also, other information such as numbers, names and addresses of consignees and consignors should be indicated on claims, as well as invoice numbers.

These procedures are primarily for your protection. A shortage discovered later, can be caused by theft, misplacement, or other causes, and neither the carrier or Manufacture can accept responsibility.

NOTE:
Galvanized and galvalume materials are susceptible to damage from prolonged periods of contact with moisture while stacked together. If there is evidence of moisture during unloading, the panels should be separated, dried and stored out of the weather to prevent permanent discoloration. Never install any material if its' quality is in question!

2.3 LOCATION OF BUILDING PARTS

- Columns and rafters are usually unloaded near their respective installed positions on blocking on the slab in position for easy makeup.

- Endwalls are usually laid out at each end of slab with the columns near respective anchor bolts.

NOTE!
An access area through the center of the building should be left for erection equipment.

Technical information contained herein is subject to change without notice.

• Hardware packages should be located centrally, usually along one sidewall near the center of the building. This will minimize walking distances to other parts of the slab area.

• Purlins and girts, depending on the number of bundles, are usually stored near the sidewalls clear of other packages or parts.

• Sheet packages are usually located along one or both sidewalls off the ground and sloping to one end to encourage drainage in case of rain.

• Accessories are usually unloaded on a corner of the slab or off the slab near one end of the building to keep them as much out of the way as possible from the active area during steel erection.

NOTE:
Steps must be taken to protect the entire job site from vandalism and pilferage

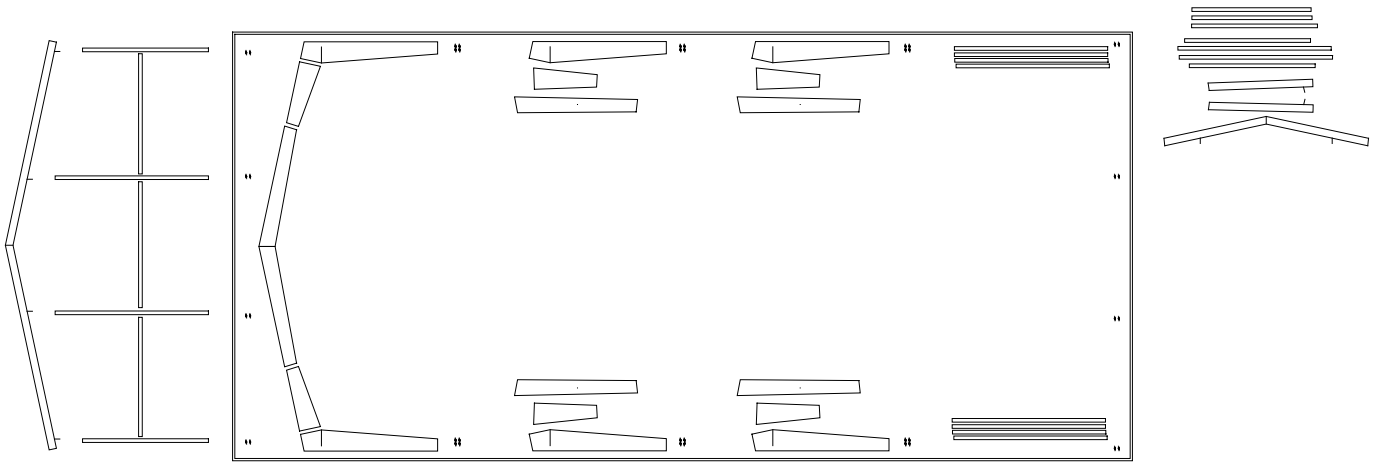

3.0 UNLOADING, HANDLING AND STORING OF MATERIAL

3.1 STRUCTURAL

As previously emphasized, a great amount of time and trouble can be saved if the building site according to a pre-arranged plan. Proper location and handling of components will eliminate unnecessary handling.

Inspect all shipments prior to releasing the tie-downs for loads that may have shifted during transit,
REMEMBER, SAFETY FIRST!

Blocking under the columns and rafters protects the splice plates and the slab from damage during the unloading process. It also facilitates the placing of slings or cables around the members for later lifting and allows members to be bolted together into sub-assemblies while on the ground. Extra care should always be exercised in the unloading operations to prevent injuries from handling the steel and to prevent damage to materials and the concrete slabs.

If water is allowed to remain for extended periods in bundles of primed parts such as girts, purlins etc., the pigment will fade and the paint will gradually soften, reducing the bond to the steel. Therefore, upon receipt of a job, all bundles of primed parts should be stored at an angle to allow any trapped water to drain away and permit air circulation for drying. Puddles of water should not be allowed to collect and remain on columns or rafters for the same reason.

All Primer should be touched up as required before erection!

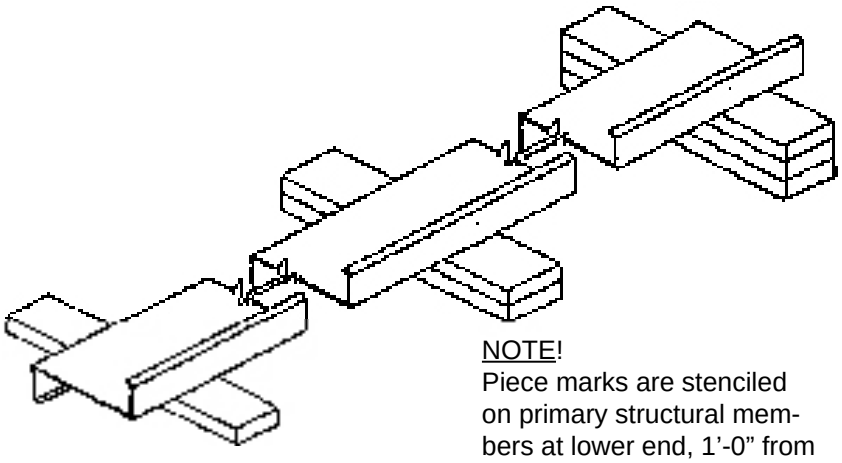

NOTE!
Piece marks are stenciled on primary structural members at lower end, 1'-0" from end

Technical information contained herein is subject to change without notice.

3.2 WALLS AND ROOF PANELS

IMPACT BUILDING SYSTEM's wall and roof panels including color coated, galvalume and galvanized, provide excellent service under widely varied conditions. All unloading and erection personnel should fully understand that these panels are quality merchandise which merit cautious care in handling.

Under no circumstances should panels be handled roughly. Packages of sheets should be lifted off the truck with extreme care taken to insure that no damage occurs to ends of the sheets or to side ribs. The packages should be stored off the ground sufficiently high to allow air circulation underneath the packages. This avoids ground moisture and deters people from walking on the packages. One end of the package should always be elevated to encourage drainage in case of rain.

All stacked metal panels are subject, to some degree,to localized discoloration or stain when water is trapped between their closely nested surfaces. IMPACT BUILDING SYSTEM exercises extreme caution during fabricating and shipping operations to insure that all panel stock is kept dry. However, due to climatic conditions, water formed by condensation of humid air can become trapped between stacked sheets. Water can also be trapped between the stacked sheets when exposed to rain. This discoloration caused by trapped moisture is often called wet storage stain.

The stain is usually superficial and has little effect on the appearance or service life of the panels as long as it is not permitted to remain on the panels. However, moisture in contact with the surface of the panels over an extended period can severely attack the finish and reduce the effective service life. Therefore, it is imperative that all panels be inspected for moisture upon receipt of the order. If moisture is present, dry the panels at once and store in a dry, warm place.

CAUTION: Care should always be taken when walking on panels. Use safety lines and nets when necessary! Panels are slippery. Oil or wax applied to the roof and wall panels for protection against weather damage will make them a very slippery surface. Wipe dry any oil that has puddled from bundles stored on a slope. Dew, frost, or other forms of moisture greatly increase the slipperiness of the panels. Always assume panel surface is slippery and act accordingly. **Think safety!!**

Use wood blocking to elevate and slope the panels in a manner that will allow moisture to drain. Wood blocking placed between bundles will provide additional air circulation. Cover the stacked bundles with a tarp or plastic cover leaving enough opening at the bottom for air to circulate.

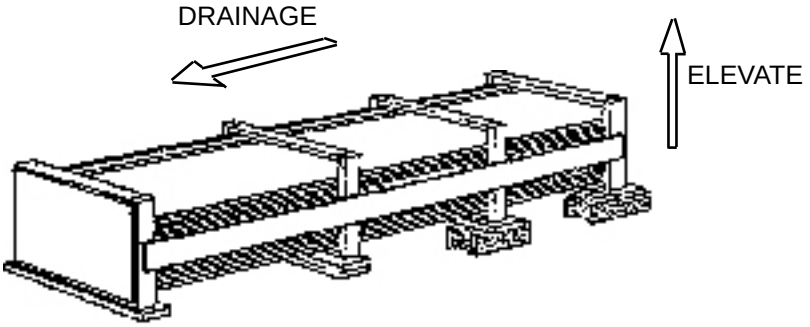

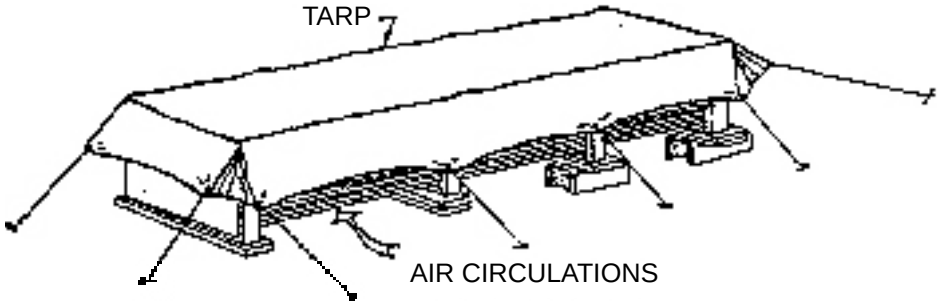

When handling or uncrating the panels, lift, rather than slide, them apart. Burred edges may scratch the coated surfaces when sheets are slid over one another. Never allow panels to be walked on while on the ground.

Rough and improper handling of a panel is inexcusable and a prime example of poor job supervision.

NOTE:
Use gloves when handling metal panels to prevent hand injuries. Be aware, of the dangers of handling panels on a windy day. A large panel can catch enough wind to knock a worker off his feet, even at ground level!! **Safety first**!

GENERAL NOTE:
1. OIL CANNING OF PANELS IS NOT A CAUSE OF REJECTION.
2. EXTREME CARE MUST BE EXERCISED DURING THE ERECTION OF ROOF PANELS AND TRIMS. FOOT TRAFFIC MAY RESULT IN PERMANENT PANEL DISTORTION AND FINISH ABRASION.

Technical information contained herein is subject to change without notice.

2.3 UNLOADING

A crane and/or forklift is necessary for unloading the components of a metal building. Care should always be taken to avoid damaging material.

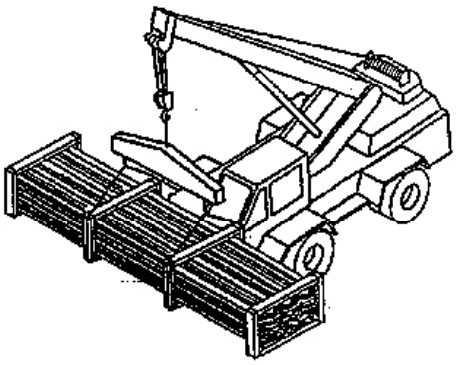

RIGHT WAY

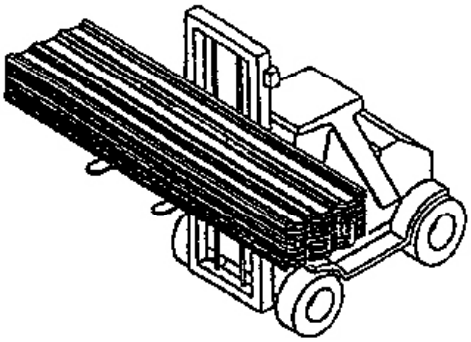

RIGHT WAY

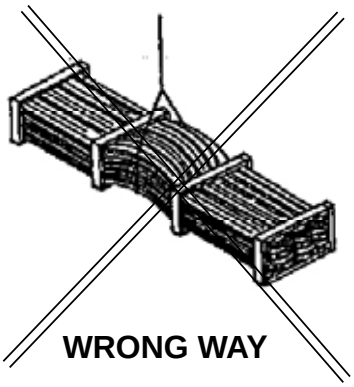

WRONG WAY

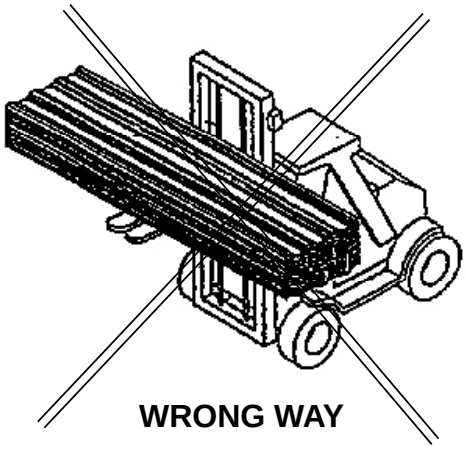

WRONG WAY

NOTE:
Long panels may be difficult to handle by lifting from beneath.

Always spread the forks as wide as possible to prevent the panels from bending. Even with the forks as wide as possible, it is still maybe necessary to lift certain loads with a crane and spreader bar to avoid damaging the material.

3.4 CABLE TENSION AND HOOK HEIGHT

Tension and hook height for lifting weights at various angles are shown by the diagrams below.

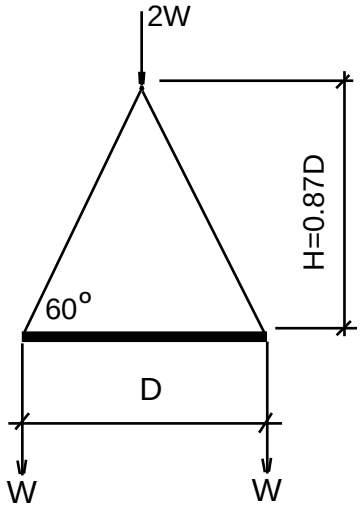

LIFTING SLING @ 60°
(TENSION IN ROPE IS 1.15 x W)

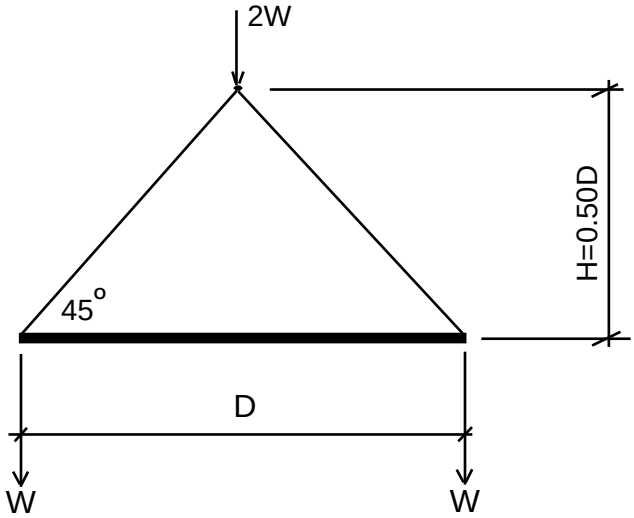

LIFTING SLING @ 45°
(TENSION IN ROPE IS 1.41 x W)

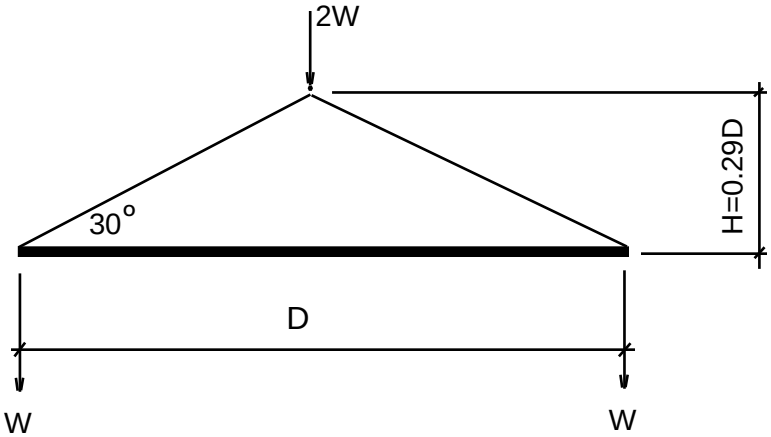

LIFTING SLING @ 30°
(TENSION IN ROPE IS 2.0 x W)

Notice how the cable tension increases as the lifting angle is decreased. It is of interest to note that if angle is reduced to 15 degrees, the cable tension is 3.9 times the vertical lift; at 10 degrees, it is 5.7 and at 5 degrees it is 11.5. When tension in the cable increases, the compressive or buckling load on the peak rafter section also increases. Slings with low lifting angles should therefore be avoided both to protect the cable and to prevent bucling the rafter.

SAFTY NOTE:
Check the wire rope for broken strands, broken wires and kinking. Replace damaged, unsafe rope immediately. Always use equipment with an adequate safety margin over the lifted load!
Safety First!

Technical information contained herein is subject to change without notice.

3.5 STRUCTURAL FRAMING PRECAUTIONS

The layout, assembly and erection of steel should be completed by responsible personnel, experienced in rigging and handling light steel members in a safe manner. Improper handling can easily result in injury, delays and unexpected added costs. This is particularly true when raising assembled rafters for wide buildings.

KEEPING ERECTION COSTS DOWN

Minimum costs should be obtained when the following conditions are met during the erection

of an Manufacture building:

1. When safety practices are discussed and initiated in advance of any work procedure.

2. When the overall work of erecting the building is divided into individual jobs, and when each job is ssigned (in proper sequence) to teams of workers consisting of from two to seven workers each, with three to five worker teams preferred.

3. When individual workers are properly trained and instructed in advance as to what they are to do and the safe way to do it. This eliminates time wasted while waiting to be told what to do next.

4. When building parts are properly laid out according to advanced planning so as to avoid lost time in repetitive handling or in searching for specific items.

5. When as many parts as can be safely raised in a single lift are bolted together in sub-assemblies on the ground where assembly work is faster and safer, thereby, requiring fewer lifts and fewer connections to be made in the air.

6. When erection of the steel framework starts at one end and continues bay by bay to the other end of the building.

7. When the first bay is completed, the individual frames are erected and tied together by skeleton purlins, and the fill-in purlins are installed after the costly lifting equipment has been released.

8. When tools and equipment of the proper kind, in good,safe condition, are available in sufficient quantity.

4.0 ERECTION OF PRIMARY AND SECONDARY STRUCTURE

4.1 GENERAL INFORMATION

Many methods and procedures are in use for erecting the structural portion of metal buildings. The techniques of raising frames vary from erecting small clear spans and endwall frames in units to erecting the larger clear spans and modular frames in sections. The erection methods used depend strictly on the type of building, the available equipment, the experience level of the crews, and the individual job conditions.

The variation in these factors preclude the establishment of a firm or specific set of erection rules and procedures. Consequently, the erection operation must be tailored by the erector to fit individual conditions and requirements. However, there are certain erection practices, pertaining to structural members, which are in general use and have proven sound over the years. Descriptions of these follow.

Erectors are cautioned not to cut primary members (rigid frame columns, rafters, end bearing frame rafters, interior columns). These are the primary support members for the frame and are designed as such. Any cutting of these members may affect the structural stability. A representative of Manufacture should be consulted prior to attempting alterations of these members.

NOTE:
Do Not install any material if its quality is in question. IMPACT BUILDING SYSTEM will not be responsible for costs incurred associated with the installation and/or removal of same.

NOTE:
In no case should building erection be started on green concrete. Anchor bolts may pull loose, concrete spall (chip out along edges) may occur and equipment may crush or crack slab. Normal Portland cement concrete should cure at least seven days and high-early-strength concrete at least three days before the structural columns are erected. Special circumstances may require even longer curing periods, consult the project engineer, not IMPACT BUIILDING SYSTEMS on foundation questions.

IMPORTANT ERECTOR'S NOTE:

IN THE EVENT THAT A DISCREPANCY OR ERROR ARISES WITH MATERIALS SHIPPED FOR THIS PROJECT OR ON THESE ERECTION DRAWINGS, THE ERECTOR / INSTALLER MUST NOTIFY **Manufacture** PRIOR TO CORRECTING. **IF Manufacture IS NOT NOTIFIED, Manufacture WILL NOT HONOR BACK-CHARGES BY ANY PARTY INVOLVED.**

Technical information contained herein is subject to change without notice.

4.2 RECOMMENDED TOOLS

When buying tools for building erection, it is recommended that only industrial rated, top quality tools be purchased. Experience shows that lighter duty tools, although cheaper initially, will not hold up satisfactorily, and in the long run, will cost more, not only in repairs, but also in lost time. High speed drill bits are always recommended since carbon steel bits will not give satisfactory service. Most erectors find that short jobbers length bits are more economical and rugged than standard length bits.

The smaller hand tools are particularly difficult to maintain because of breakage, losses, pilferage, etc. Some erectors require the workers on the crew to furnish their own tools in this category. Others issue the tools to individuals or foremen who are held responsible and liable for them. Since work rules and customs differ according to localities, each erector should establish a definite policy which is acceptable to his workers while protecting his property.

Maintaining equipment and tools in safe clean first class condition reduces injuries, lowers replacement expense, and stimulates workers to take better care of equipment and greater pride in their work.

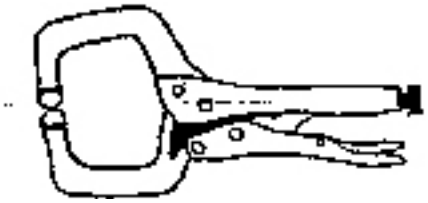

NOTE:
Make certain that the correct tool is available and used for each phase of building erection. Improper tool usage results in employee injury.All tools should be OSHA approved for commercial construction use.
Safety first!!

RECOMMENDED MINIMUM BASIC TOOL PACKAGE FOR 5-7 MAN ERECTION CREWS

HAND TOOLS	QUANTITY
Belts with bolt bags	4-6
Bridge reamer, 9/16”, 11/16”, 13/16”, 15/16”	1 each
Broom Push	1-3
Brush, paint, misc.	2-6
Brush, wire	1
Bucket	2
“C” clamps (6”, 9” and 12”)	4-10
Cable, 1/2” diameter	300’
Cable clamps	12-32
Can, 5 gal gasoline wlsafety spout	1 -2
Can, oil	1
Caulking gun, open barrel	2-6
Chain , 35’ long (to lock equipment)	1
Chalk line, 100’ long and chalk	2
Channel locks	2
Chokers (or as required)	
1/2” cable, 6’ long, eyes both ends	4- 6
5/8” cable, 6’ long, eyes both ends	2
1/2” cable, 1O’-14’ long, eyes both ends	4
Circuit tester	1
Cold chisel	1
Come-a-long, 3 ton	1
Come-a-long, 1 ton	2
Dolly	1
Drift pin (barrel pin, bull pin)	2-5
Extension cord, #10-3, 2/4 way box, 250’ long	1
Extension cord, #12-3, 100’ long	2 - 3
Extension cord, #12-3, 25’ long	1
Fire extinguisher, #10	2
Files, assorted	4
First aid kit	1
Flashlight	1
Gloves, pr.	10
Goggles, cutting	3
Goggles, safety	10
Ground fault interrupter(circuit breaker)	as req’ d
Hammers	
Carpenters claw	1 -2
Ball peen	2-5
Sledge	
1 -2	
Rubber	1-3
Welder’s Chipping	1

Technical information contained herein is subject to change without notice.

HAND TOOLS	QUANTITY
Handlines (rope), 1/2”-5/8” dia., 60’ long wlhooks	4 - 7
Hard hats	5 - 11
Knife, pocket	1
Knife, putty	2
Ladders	
Extension, 20’ to 40’ long	2
Step, 6’ to 8’ long	2-3
Level rod	1
Load binders	3
Mop, sponge	1
Padlocks	4
Pliers, side cutter	2
Plumb bob	1-2
Pop rivet gun (manual or electric)	2 - 3
Punch, center	1
Safety Harnesses	5-7
Safety Harness tie-off rigging	as req’d
Safety Netting	as req’d
Salt tablets	quantity
Saws, carpenters, hand	1
Saws, hack w/blade	1
Saw horses	4
Scaffold - section w/ wheels	2
Screwdriver, sets, flat and Phillips	1 -4
Screwdriver, 10 Pc. set, 1/4” hex drive	1
Shear, portable panel	1 each
Shovels	2
Slings, nylon, 4” wide, 10, - 12’ long	4
Snips,aviation (2 R/H, 2 L/H, straight cut)	5
Snips, large (bulldogs)	1
Spirit level 4’ long	1
Sponges	2
Spreader, 1 set 3/4” dia., 20’,center eye w/ hook ends	1
Staple gun and staples	4
Square, framing	1-2
Square, Try	1-2
Tape measure -12’ to 16’ long	1-5
Tape measure -100, long	1
Tool box	5
Transit	1
Turnbuckles - 3/4” min.	8
Vice grips, sheet metal	2-4
Vice grips, standard	5
Vise grips, welding clamp	2-4

HAND TOOLS	QUANTITY	
Water cooler (5 gal.) and 1 case cups	1	
Wedge, steel	2	
Wire (9#), rolls	2	
Wrecking bar	1	
Wrenches, 12” adjustable	5	
Wrenches, 15’ adjustable	2	
Open end structural w/drift handle (3/4”, 7/8”, 1 1/8”, 1 1/4”, 1 7/8”, 1 1/2”, 1 5/8”, 1 7/8”, 2 1/4”)		2-7
Box end structural (3/4”, 7/8”, 1 1/8”, 1 1/4”, 1 7/8”, 1 1/2”, 1 5/8”, 1 7/8”, 2 1/4”)		2-7
1/2” drive ratchet with 3/4”, 7/8”, 1 1/8” and 1 1/4” six point sockets,extensions and universal	2-7	
3/4” or 1” drive ratchet with 20’ or 24” handle and sockets to a maximum size of 1 5/8”	2 -7	

POWER TOOLS	QUANTITY	
Cutting torch w/100’ hose, bottle cart, with fire extinguishers	1	
Drill, 1/4” drive	2-3	
Drill, 1/2” drive	1	
Drill bits (1/8”)		2-6 doz
Generator - 2 to 5 KW, with 11OV D.C. with 50’ ground, 75’ lead and access	1	
Hammerdrillwith6bits	1	
Impact tool 1/2”	1-2	
Impact wrench and sockets	1	
Power nibbler	1	
Power shears	1	
716” heavy duty skill saw	1	
Screw guns		
1900 RPM electric screw gun-self drill screws	3 - 5	
500 RPM electric screw gun self - tapping screws	3 - 5	
5/16”, 3/8”, 7/16” hexhead sockets	3 - 5	
Welding hood with spare lens	1	
Welding unit	1	

Note:
Additional tools may be required depending on the specific requirements of the building. The erector should plan ahead to eliminate delays!

Technical information contained herein is subject to change without notice.

4.3 UNLOADING FRAMING

LIFTING CABLES AND SPREADER BARS

In all instances the length of the lifting cables should be such that the angle between the rafter and the lifting cables is no less than 45 degrees. To reduce the severe compression stresses at the ridge of the rafters which are created by the angle of lifting cables, a spreader bar is recommended, which allows the lifting cables to be parallel to each other. See page 23 for additional information!

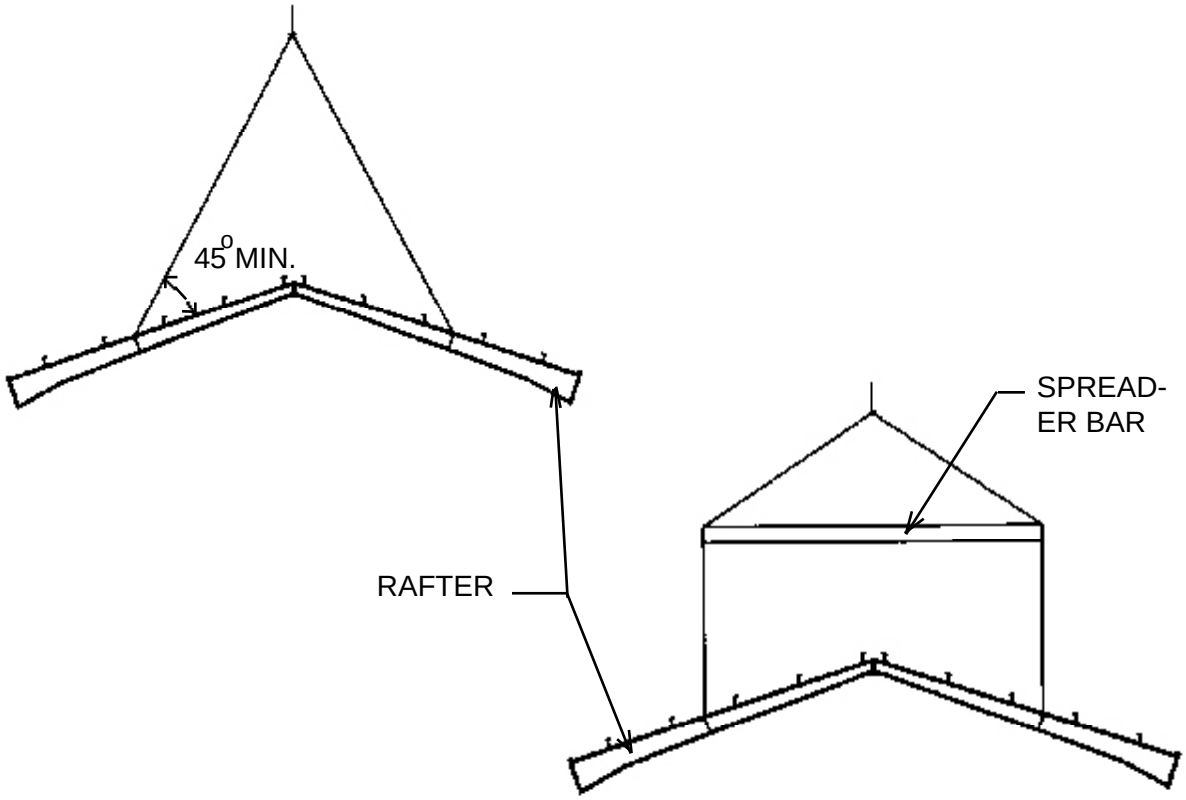

NOTE:
Stay well in the clear of loads being moved by any lifting device. Hands and feet should be kept clear of moving loads and never stand under a load being lifted. Remember, **SAFETY FIRST!**

4.4 RAISING RIGID FRAMES

The intermediate or interior frames nearest the bearing endwall are usually erected first. This bay usually contains the optional diagonal bracing. The proper completion and plumbing of this first bay, as will be discussed later, is extremely important to the successful completion of the building.

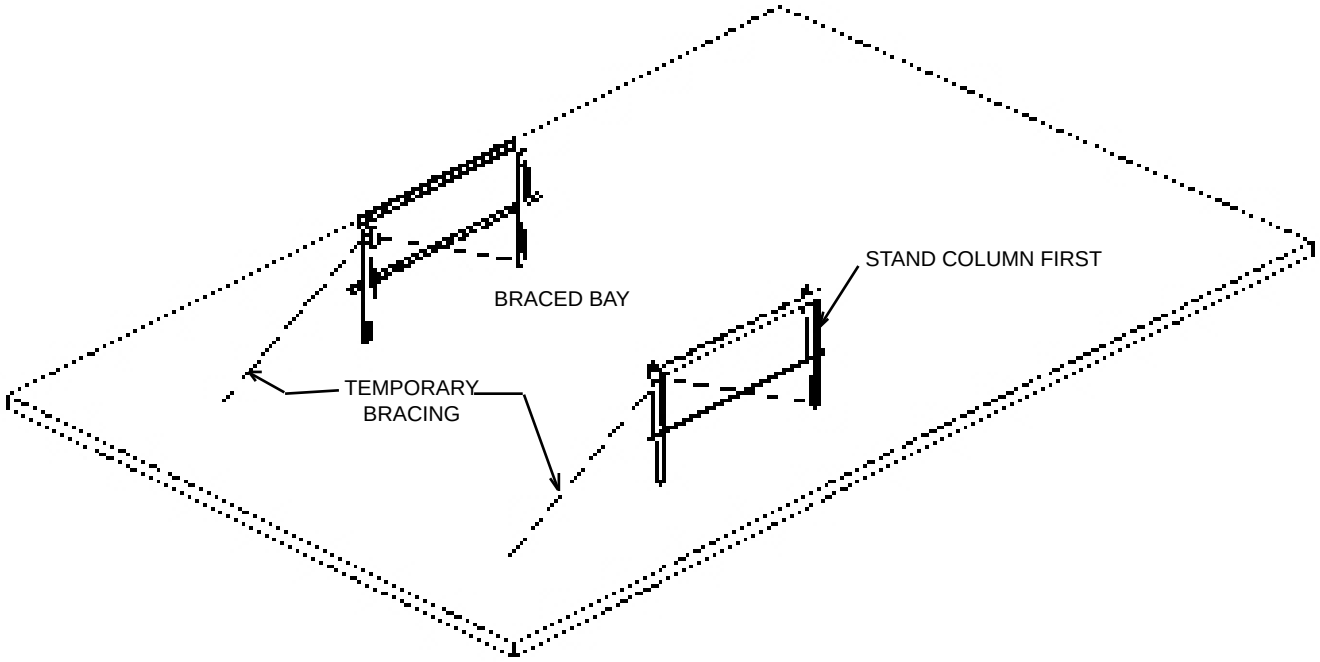

Although several methods are used to erect rigid frames, it has been found most satisfactory to erect the columns first, tie them together with the girts and tighten the anchor bolts*. On small spans and short eave heights, columns can often be set in place by hand without the use of hoisting equipment. Temporary bracing should always be installed as soon as sections are lifted in place.

* The anchor bolt tension may need to be adjusted to seat the rafter.

NOTE:
Each worker should be trained to use the safest and most productive erection techniques.
Safety first!

Technical information contained herein is subject to change without notice.

After the columns have been erected, the ground assembled rafter is hoisted into place and connected to the columns. The size of the rafter which can be safely handled depends on the equipment available and the experience of the erection foreman. Generally as many connections as possible are made on the ground.

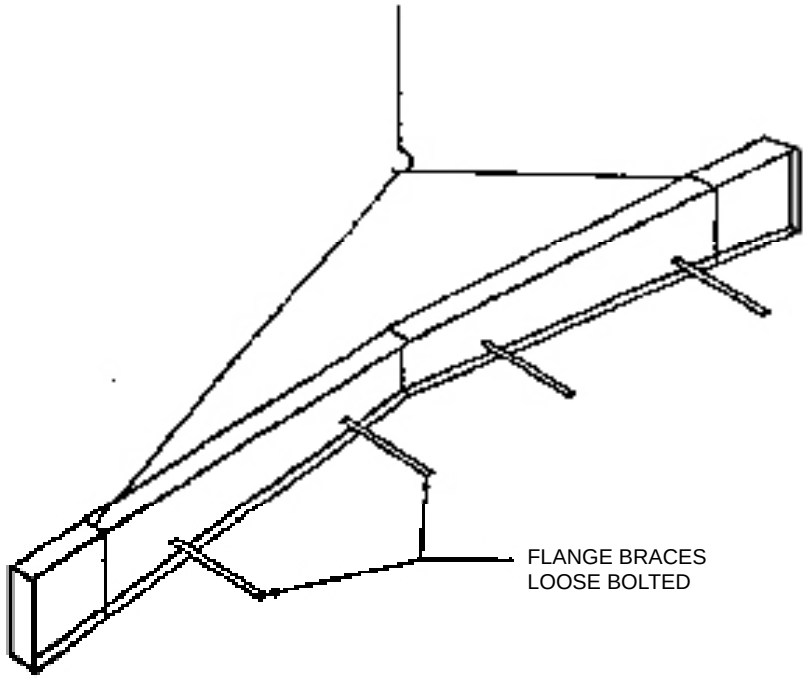

The flange brace should be bolted to the rafter prior to raising in order to save time. The hoisting equipment should never be released from the rafter until the frame is adequately braced, so it cannot buckle or tip in the longitudinal direction of the building.

NOTE:
Stay well in the clear of loads being moved by any type of lifting equipment. **Safety first!**

A second method, when equipment is limited, (while not recommended) is illustrated below. After the column is erected, the first rafter section, with the lifting cable around the balance point, is raised into position and bolted to the column. Then, when the free end of the rafter is supported by any safe method (such as an adequate wood frame, or a metal scaffold, properly braced, and of satisfactory capacity) the lifting cable can be released. The procedure is then repeated until the entire frame is in place and bolted together at the ridge.

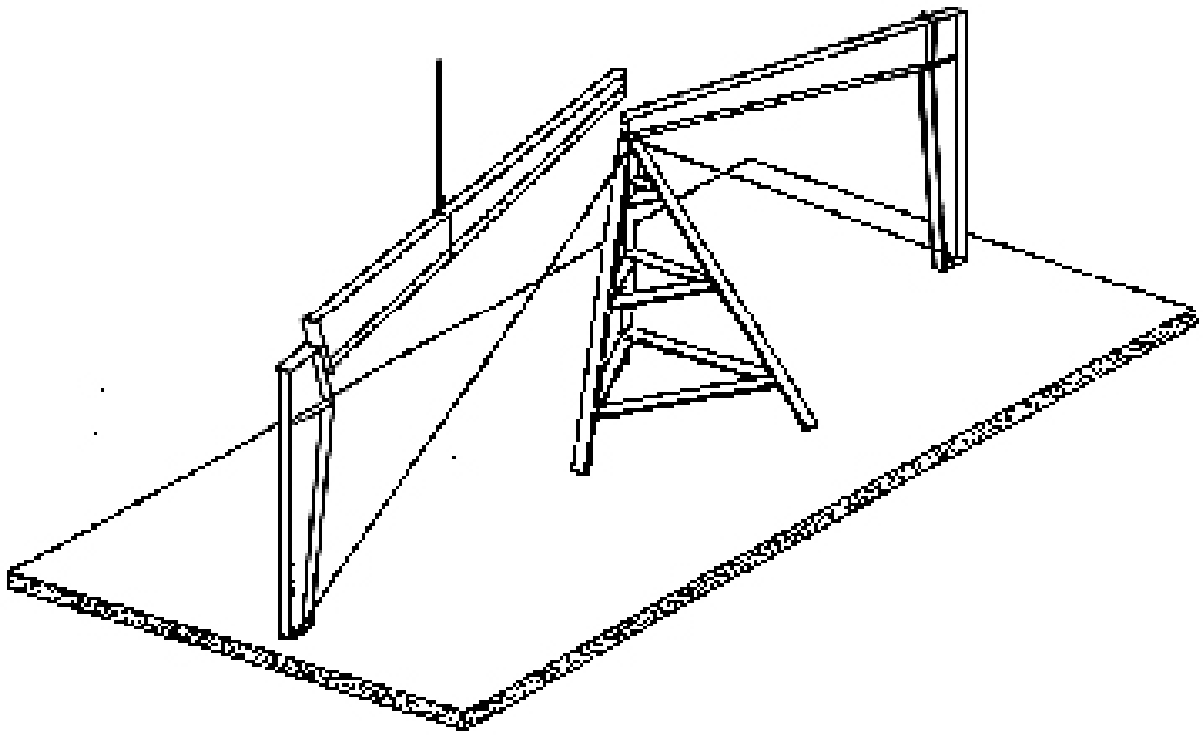

Still a third method for erecting rigid frames with limited equipment adopts the same support procedure described previously, but differs in that the sidewall column and the first rafter section are bolted together on the ground and raised into position in one lift. The lifting cable is again attached at the balance point (about the quarter point of the rafter in this case). When the column is secured by the anchor bolts and the free end supported, the process is repeated with the frame bolted together at the ridge.

NOTE:
Stay well in the clear of loads being moved by any type of lifting equipment or supported by temporary bracing. **Safety first!**

Technical information contained herein is subject to change without notice.

When the rafters consist of several roof beams, as in the case of wide buildings, a safe procedure of raising by sections and supporting the free end must be followed, regardless of the type of equipment available. In most instances the work proceeds from outside columns inward toward the peak until the entire frame is bolted into place.

The same general procedures of erection apply to either clear span or multiple span frames. In the case of the latter, the support for rafter sections during erection is generally supplied by the interior columns, themselves, making temporary supports unnecessary.

Two words of caution concerning the erection of rigid frames are in order. The first is that rigid frames, especially free ends or cantilevered sections should never be left "for the day" in an unsupported, unbraced or unguyed condition. Such practice has resulted in the total loss of considerable amounts of erected steel because of wind. The second word of caution pertains to the additional care required in the erection of multiple span frames compared to clear span frames. Frames with interior columns, because of closer supports, have much lighter sections. They are much more apt to buckle during erection than clear span frames, and consequently require greater care in rigging and handling.

4.5 CONNECTION BOLTS

Bolts used to make connections in secondary framing members such as the purlins are usually 1/2" diameter, ASTM designation A307. All primary framing connections are made with ASTM A325 bolts, usually 5/8", 3/4", 7/8" and 1' diameters. The size and grade of the bolt are marked on the building erection drawings.

NOTE:
Each worker should be trained to use the safest and most productive erection techniques.
Safety first

BOLT TIGHTENING PROCEDURES

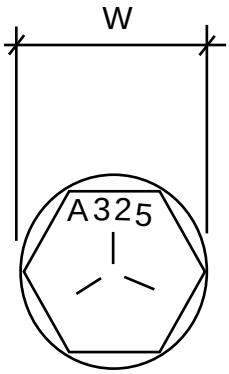

A325 BOLTS

BOLT SIZE (INCHES)	W (INCHES)	SPECIFIED MINIMUM FASTENER TENSION KIPS (1000 LBS)	SPECIFIED NUT ROTATION	
			BOLT LENGTH <=4 DIAMETER	BOLT LENGTH > 4 DIAMETER
1/2	7/8	12	1/3 TURN	1/2 TURN
5/8	1 1/16	19		
3/4	1 1/4	28		
7/8	1 7/16	39		
1	1 5/8	51		
1 1/4	2	71		

JOINTS NOT SUBJECT TO TENSION LOADS

JOINTS NOT SUBJECT TO TENSION LOADS need only be tightened to the snug tight condition, defined as the tightness attained by a few impacts of an impact wrench or the full effort of a man using an ordinary spud wrench.

JOINTS SUBJECT TO TENSION LOADS

Two tightening procedures are specified for A325 bolts in joints subject to tension loads, Turn-of-the-nut method and direct tension indicator.

Turn-of-the-nut method - When turn-of-the-nut method is used to provide tension, first bring enough bolts to a “snug tight” condition to insure that the parts of the joints are brought into good contact with each other. Next, place bolts in all remaining bolt holes and bring to unsnug tight”. Then additionally tighten all bolts per the above table - progressing from the bolts nearest the web, to the free edges. During this operation there shall be no rotation of the part not turned by the wrench.

Tightening by use of a direct tension indicator - Tightening by this means is permitted provided it can be demonstrated, by an accurate direct measurement procedure, that the bolts have been tightened to specified tension.

Consult latest edition of the AISC Manual of Steel Construction for more complete instructions for installing high strength bolts.

Technical information contained herein is subject to change without notice.

TYPICAL PRIMARY FRAMING CONNECTION DETAILS

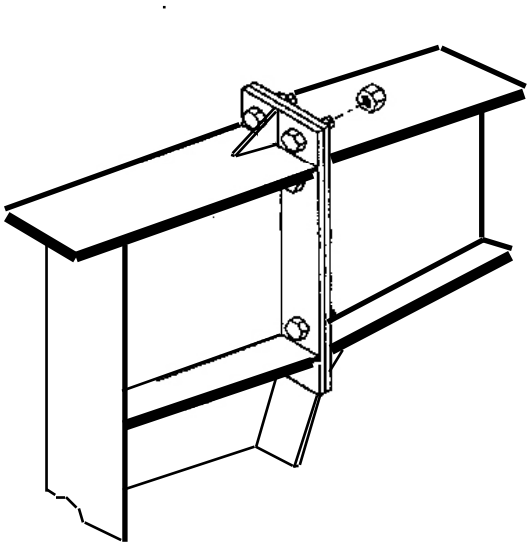

COLUMN TO RAFTER
AT KNEE

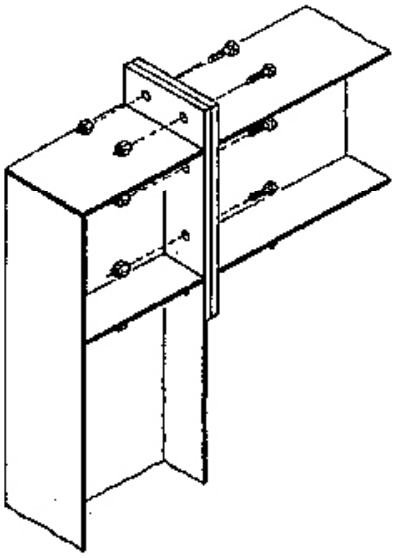

COLUMN TO RAFTER
AT KNEE

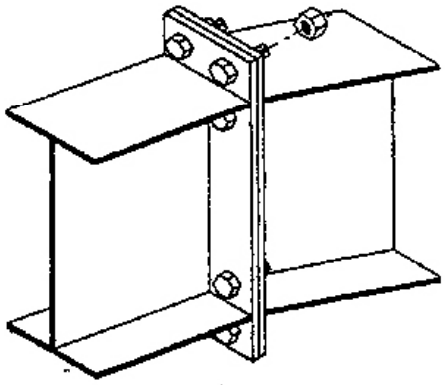

RIDGE SPLICE

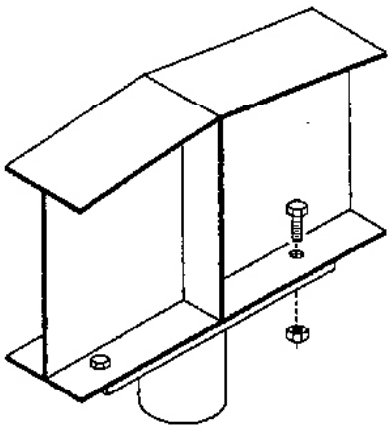

RAFTER AT RIDGE
WITH COLUMN

TYPICAL PRIMARY FRAMING CONNECTION DETAILS

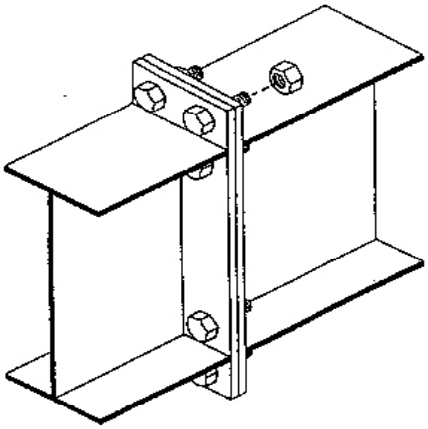

RAFTER INTERMEDIATE SPLICE

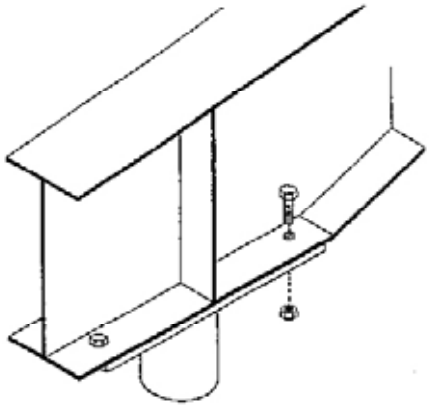

INTERIOR COLUMN
TO RAFTER

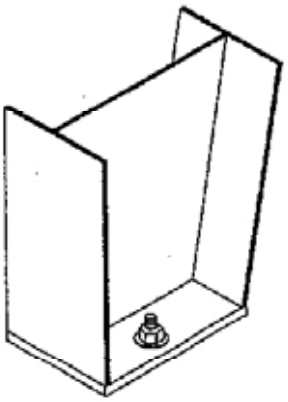

EXTERIOR COLUMN
TO FOUNDATION

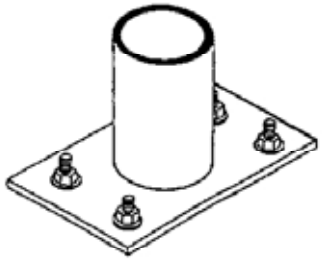

INTERIOR COLUMN
TO FOUNDATION

Technical information contained herein is subject to change without notice.

TYPICAL SECONDARY FRAMING CONNECTION DETAILS

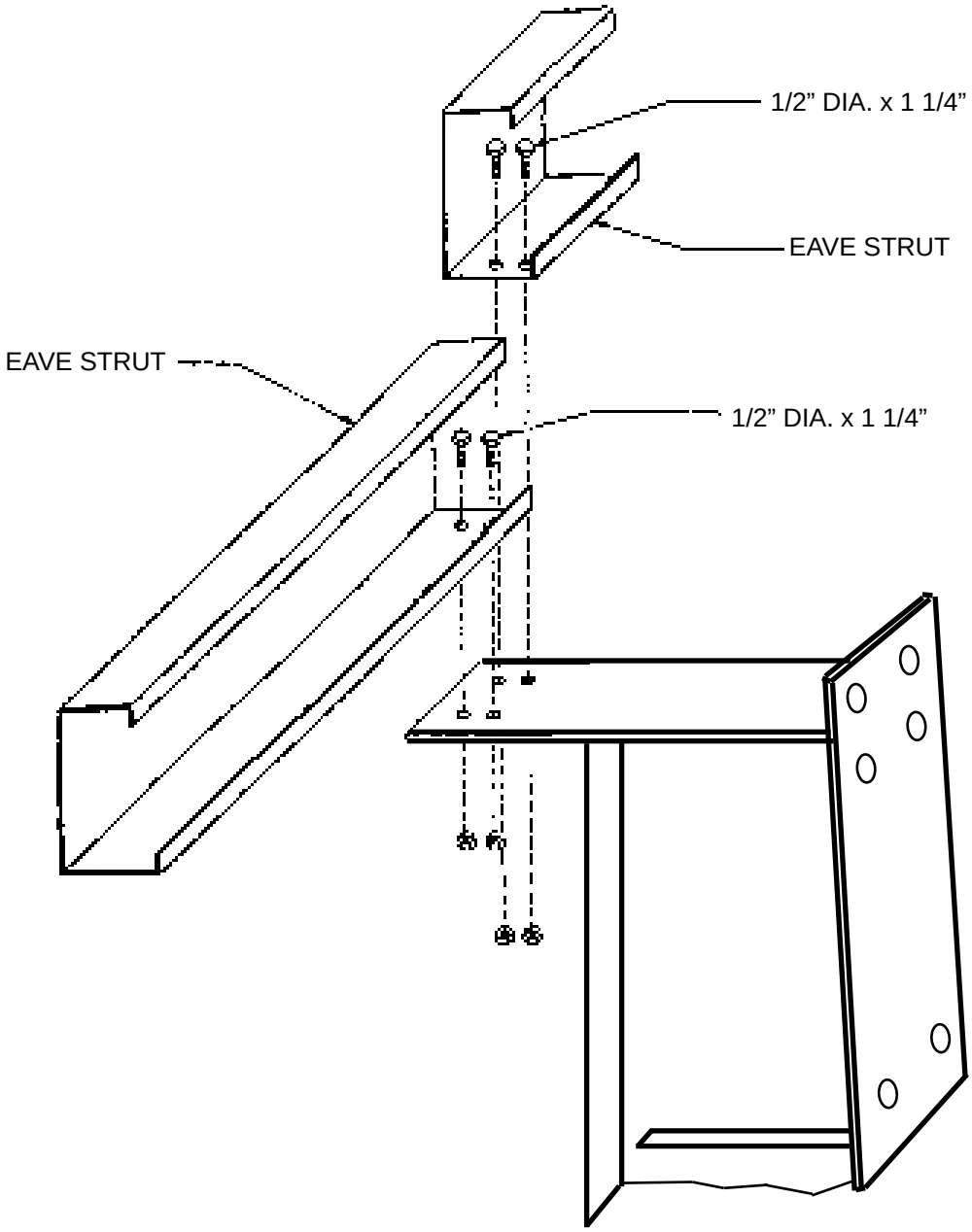

EAVE STRUT TO COLUMN

TYPICAL SECONDARY FRAMING CONNECTION DETAILS

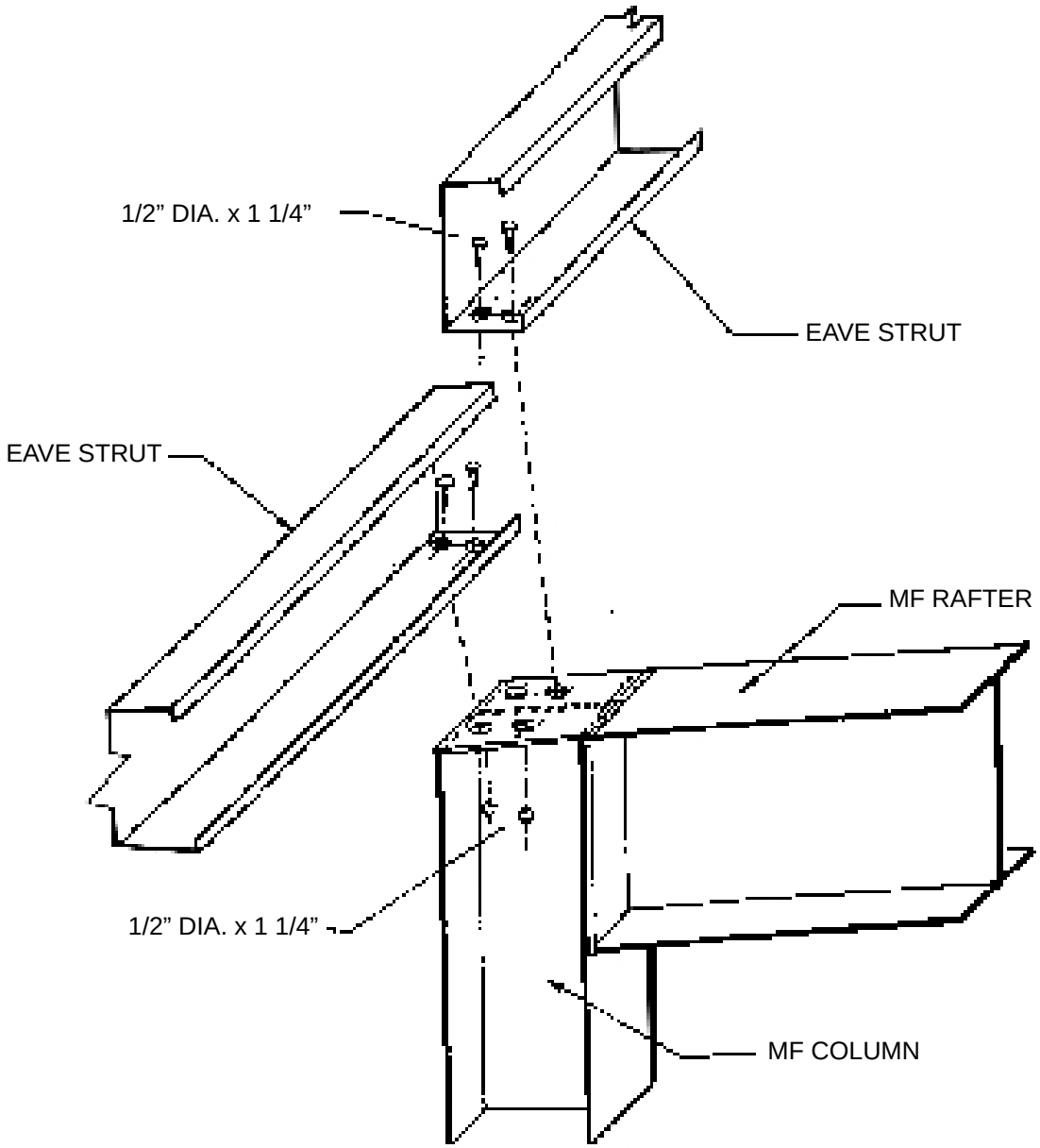

EAVE STRUT TO COLUMN

NOTE:
The above example represents a typical flush girts - eave strut connection. Please refer to personalized erection drawings for specific requirements. **SAFETY FIRST!**

Technical information contained herein is subject to change without notice.

TYPICAL SECONDARY FRAMING CONNECTIONS

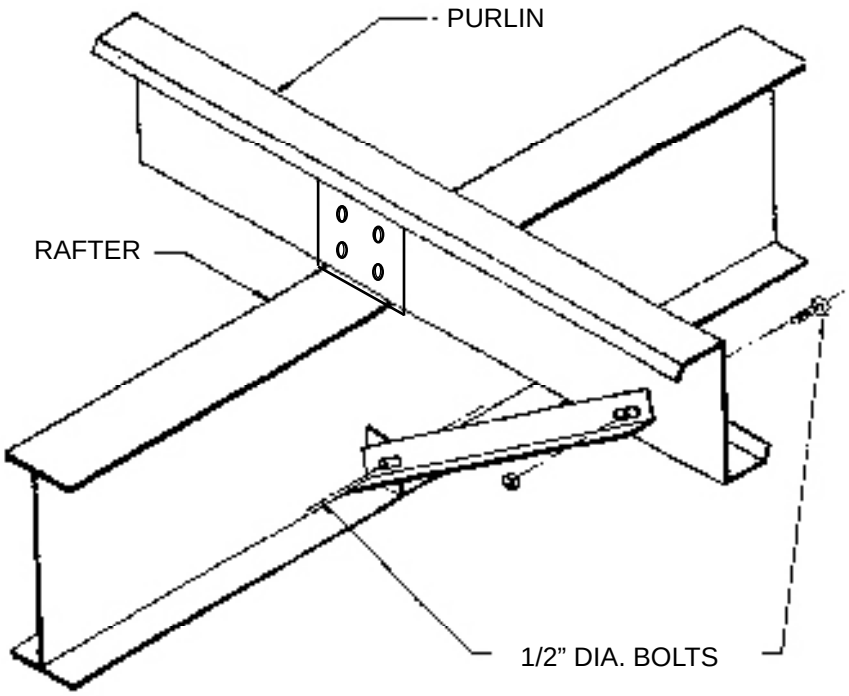

FLANGE BRACE TO PURLIN

NOTE:
Bolts shown here required to be tightened to snug tight condition on round holes only.

TYPICAL SECONDARY FRAMING CONNECTIONS

INTERIOR BAY PURLIN/GIRT FRAMING

Manufacture utilizes uneven legs on our “Z” shapes to improve erection time and to increase the overall strength of the member. Since the “Z”s are designed to nest, the erector must be aware that the 2 1/8” fl ange should be up on odd numbered bays and down on even numbered bays, to allow the members to seat properly.

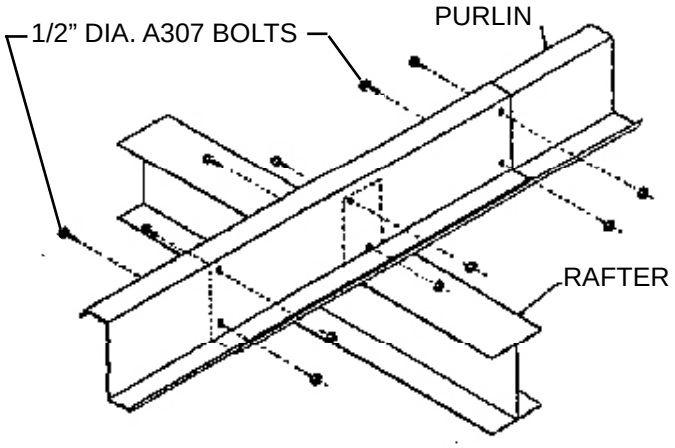

2’-1” LAP

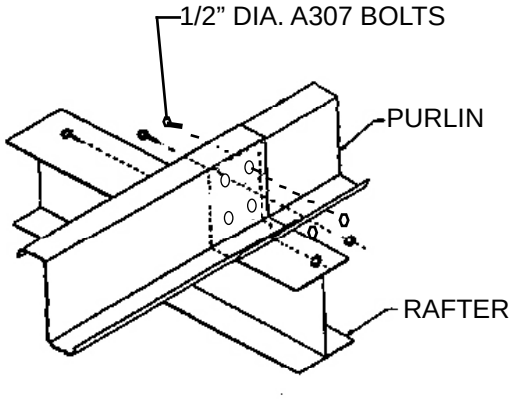

0’-3” LAP

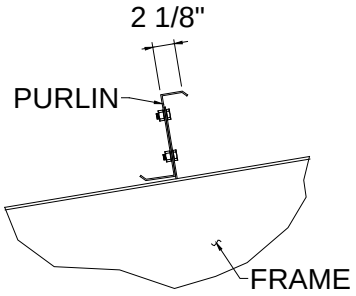

ODD BAY

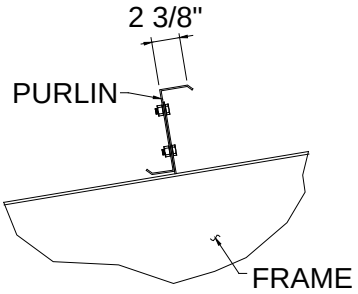

EVEN BAY

<u>NOTE:</u>
Bolts shown here required to be tightened to snug tight condition on round holes only.

Technical information contained herein is subject to change without notice.

TYPICAL SECONDARY FRAMING CONNECTION DETAILS

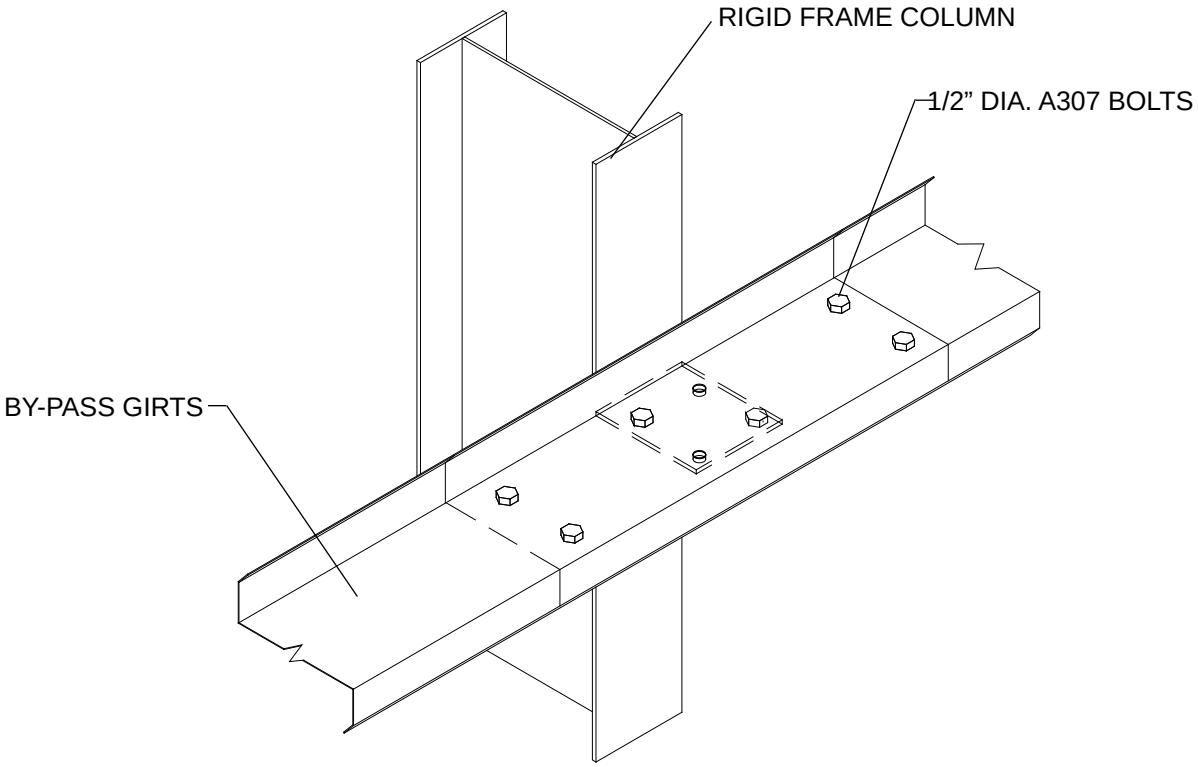

INTERIOR BAY PURLIN / GIRT FRAMING
(BY-PASS GIRT)

NOTE:
Typical connection for girt / purlin to frame at 1’-1”, 2’-1” and 3’-1” lap.
Use 1/2” diameter A307 bolts without washers as shown. **SAFETY FIRST!**

TYPICAL SECONDARY FRAMING CONNECTION DETAILS

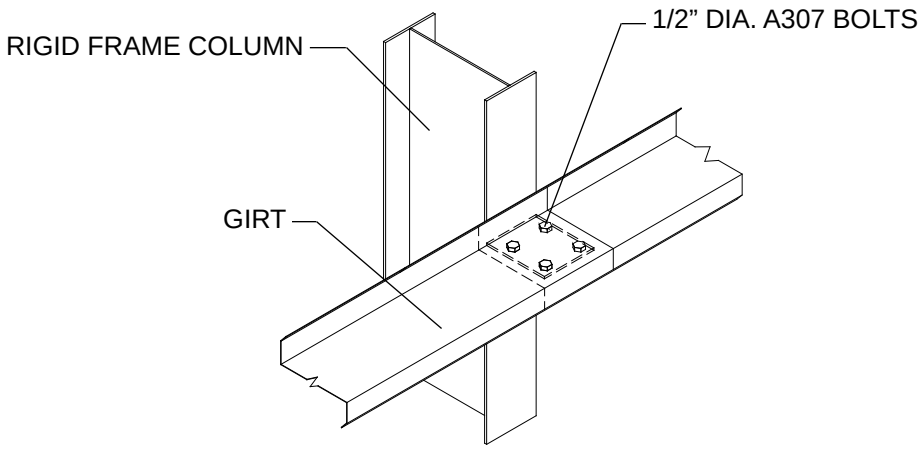

BY-PASS GIRT WITH 3” LAP

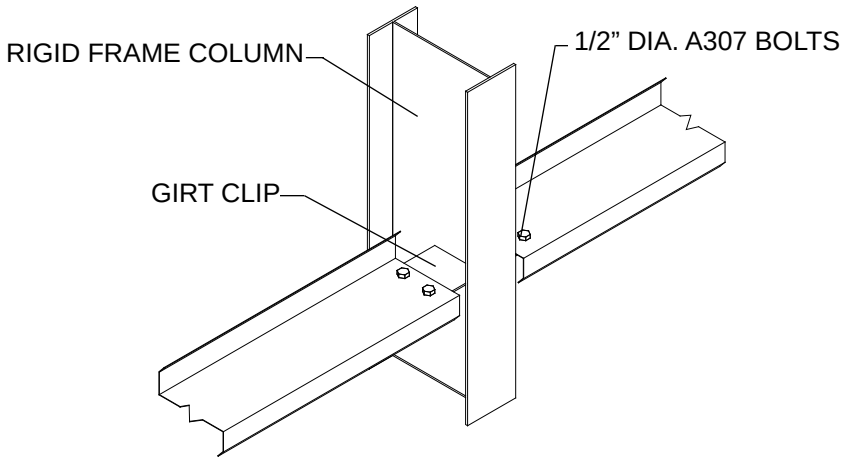

FLUSH GIRT

INTERIOR BAY PURLIN / GIRT FRAMING

NOTE:
The 3” lap requires four (4) 1/2” dia. bolts. The flush girt connection requires two (2) or four (4) 1/2” diameter blots. **SAFETY FIRST!**

Technical information contained herein is subject to change without notice.

4.6 COMPLETING AND PLUMBING THE FIRST BAY

After the fi rst intermediate or interior frames have been set, Manufacture recommends that all purlins, girts, and eave struts be installed in the braced bay and the entire bay plumbed, aligned and braced before pro-ceeding further. If the building is designed without cable bracing, the erector is responsible for providing temporary erection bracing.

When this bay is properly and accurately plumbed and braced, the remaining members, to a large degree, will automatically plumb and align when installed. Only a final check of the building plumb remains, and few adjustments, if any, will be necessary.

Plumb the frame with a plumb bob or transit, not a spirit level. To measure lateral plumbness hang plumb bob from top of the column down the outside flange as shown below. Adjust plumbing cables to obtain equal tape measurements at top of column.

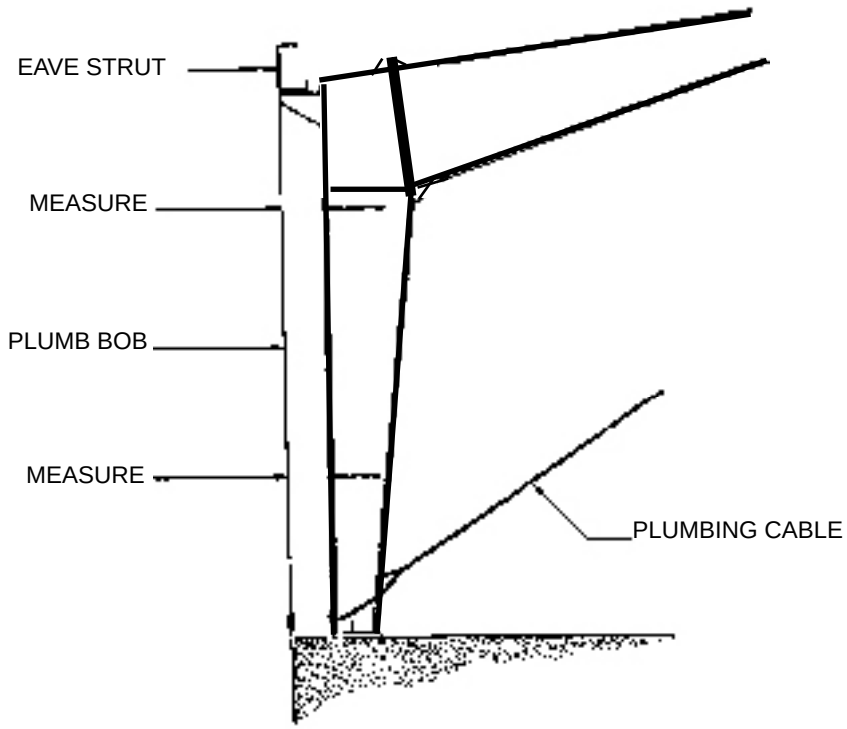

NOTE:
Use OSHA approved tie offs, netting or rails when working on roof areas, and adhere to all OSHA safety rules. **Safety first!**

To plumb the braced bay without a transit, run a chalk line from out of flange to out of flange of columns on the foundation (per drawing). Drop plumb bob(s) from rafter flange(s) and square the frame using the rod bracing for leverage.

To plumb the braced bay lengthwise using a transit, sight in the transit parallel to the base of the frame columns by using a position a few inches from the frame line (See sketch). Make sure transit is level. Check frame by reading tape through transit. First bring columns into plumb, then rafters, by adjusting diagonal bracing. Take all measurements from centerline of flange. Take a measurement at the base of the columns and adjust the bracing to correct the transit reading at the rafter measuring location. Once the frame is plumb, all connection bolts and anchor bolts should be tightened.

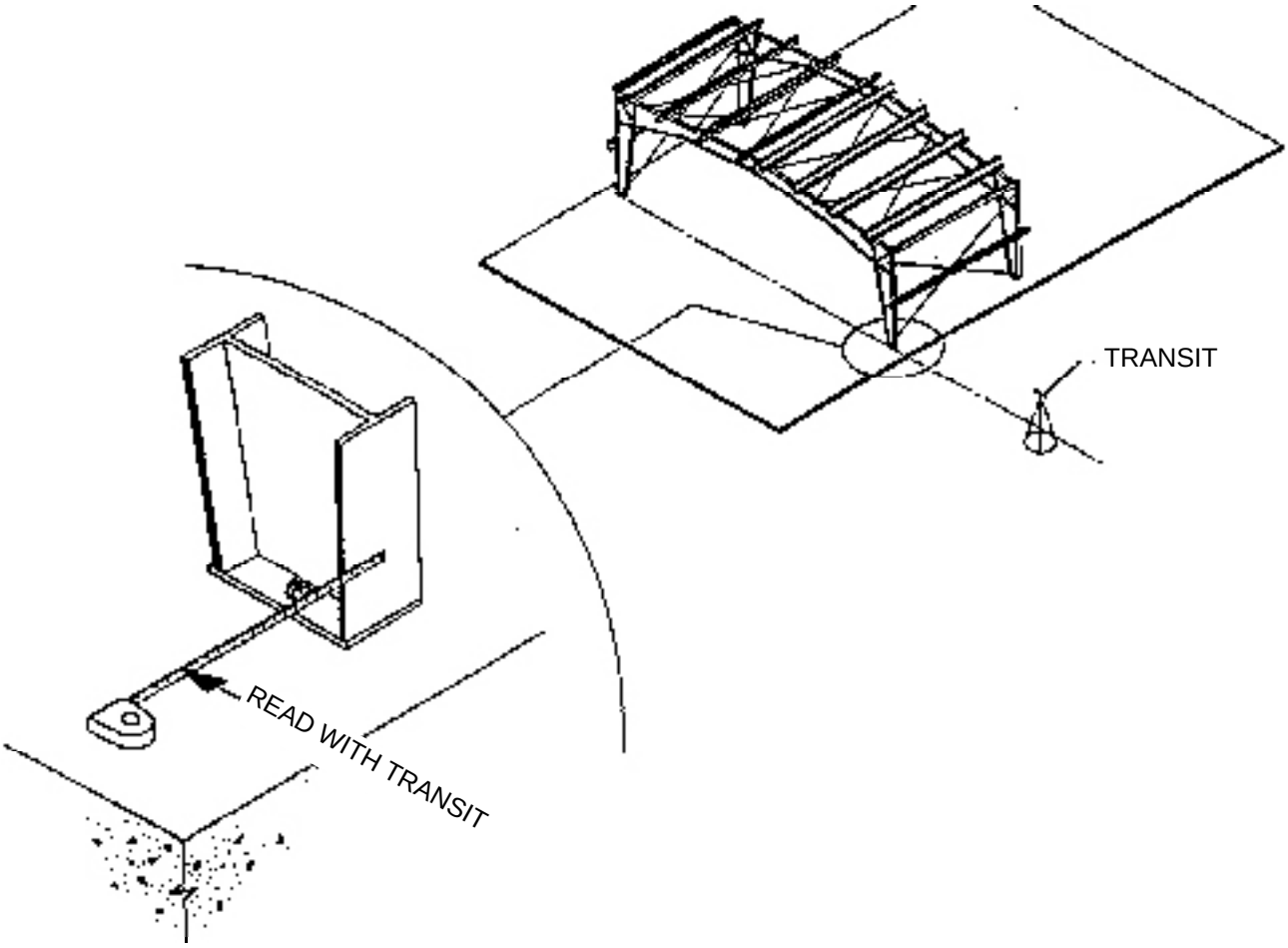

NOTE:
Each worker should be trained to use the safest and most productive erection techniques.
SAFETY FIRST!

Technical information contained herein is subject to change without notice.

4.7 ERECTING THE COLUMN AND BEAM ENDWALLS

Column and beam endwalls of 50 feet or less in span may be raised into position and set on the anchor bolts as a unit. All rafters, columns, girts (except outside endwall girts which connect to the sidewall girts),door headers, door jambs, clips, diagonal brace rods, etc. should be assembled on the ground with the bolts left finger tight. A spreader bar should be used to raise the endwall frame. Because of the flexibility of the column and beam frames, care must be taken in locating the points of attachment of the cables, and in raising the frame, to avoid bending about the minor axis.

For spans of 60 feet and greater, the columns are usually erected first and then capped with the endwall rafter. The girts, headers, jambs and diagonal brace rods are then added between the end columns. During this erection process. the frame must be properly braced or guyed before the lifting lines are disengaged. Final bolt tightening should be done once the frame is plumb and square.

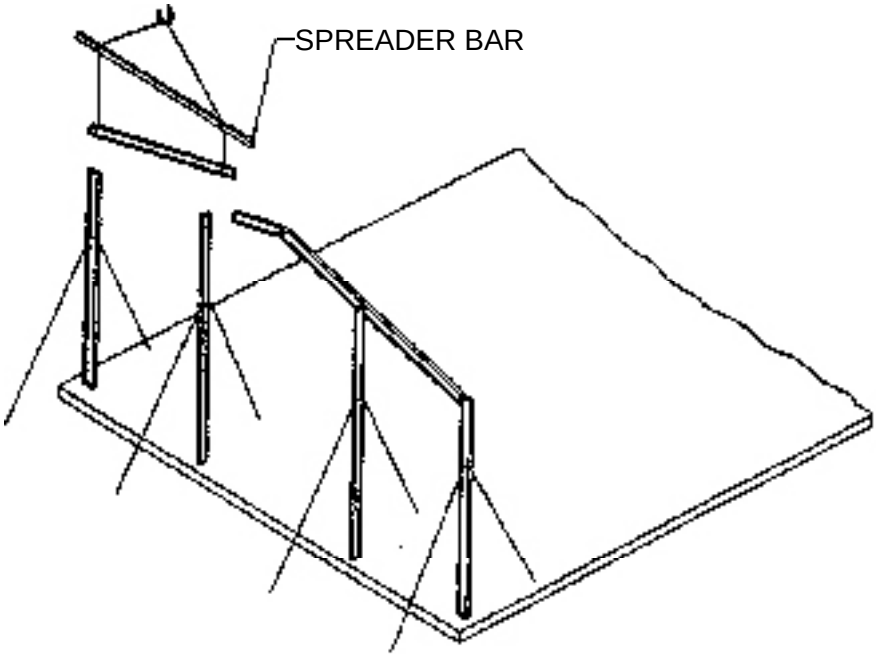

NOTE:
Stay clear of all moving loads Make certain all framing is properly braced or guyed before lifting lines are removed. Follow all OSHA regulations! **Safety first!**

4.8 ERECTING THE REMAINING FRAMES

The remaining frames are erected in like manner, initially with only a few purlins being installed in each bay, as shown below, working from one end of the building to the other. To lend overall rigidity to the structure, install flange braces to the purlins at specified locations. All purlin, girt and eave strut
connection bolts are left loose so that the entire skeleton frame work can be plumbed without undue difficulty.The remaining purlins can be positioned on the rafter in each bay to facilitate the completion of the roof framing.

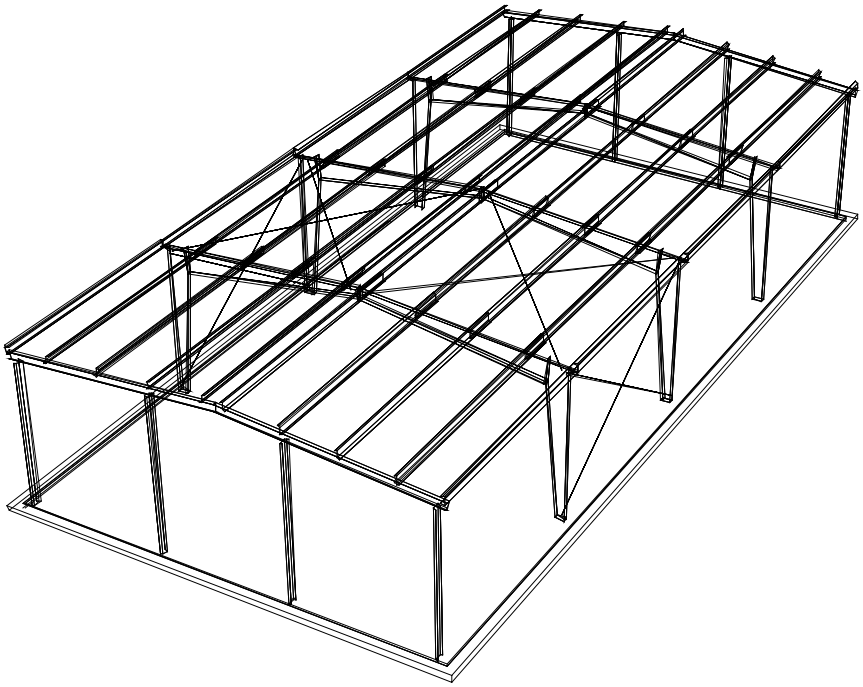

NOTE:
Always follow all OSHA safety recommendations. **Safety first!**

Technical information contained herein is subject to change without notice.

At this point, hoisting equipment will normally not be used again until roof sheeting begins. Remaining purlins and girts are then loose bolted in place, as well as flange braces.

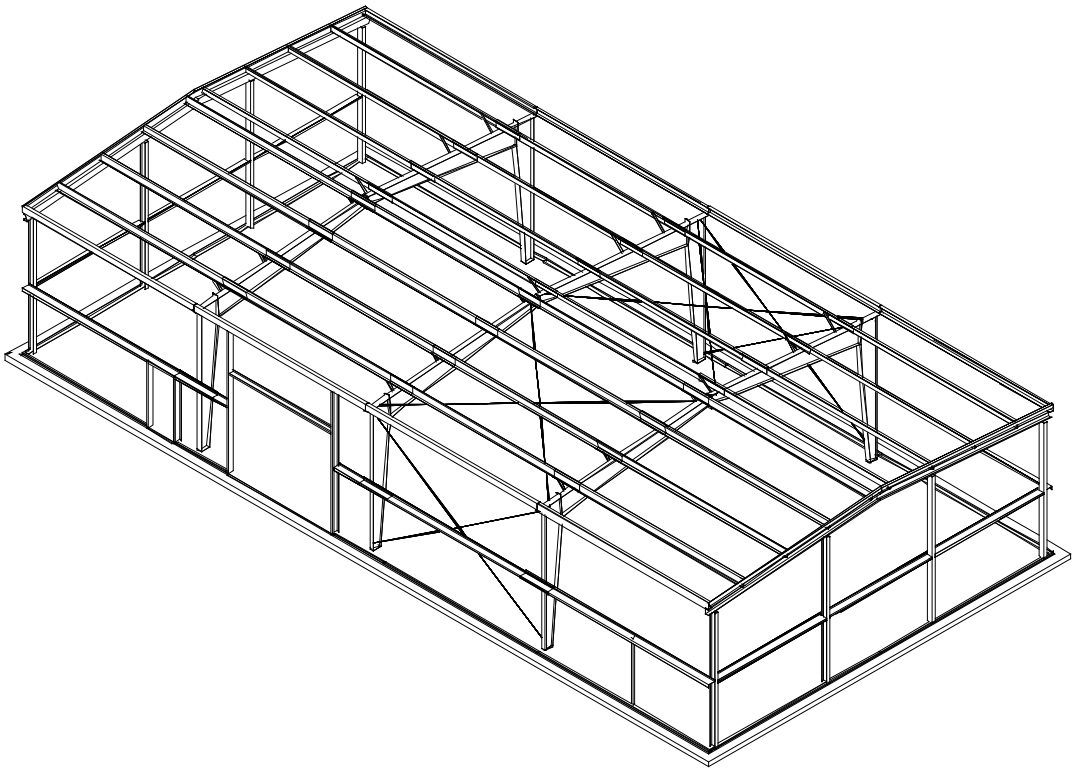

NOTE:
Always use OSHA approved tie off, netting or rails when working on roof areas. **Safety first!**

4.9 WIND BRACING INSTALLATION

Diagonal bracing in metal buildings is critical! They provide support for wind loads or other longitudinal loads, such as those created by an overhead crane in the completed structure. Many times additional temporary bracing is needed to stabilize the structure during erection. This requirement should be reviewed by the erector, and any additional bracing should be provided by the erector. On some smaller buildings, diagonal bracing is not needed for the building design, so any erection bracing needed must be furnished by the erector.

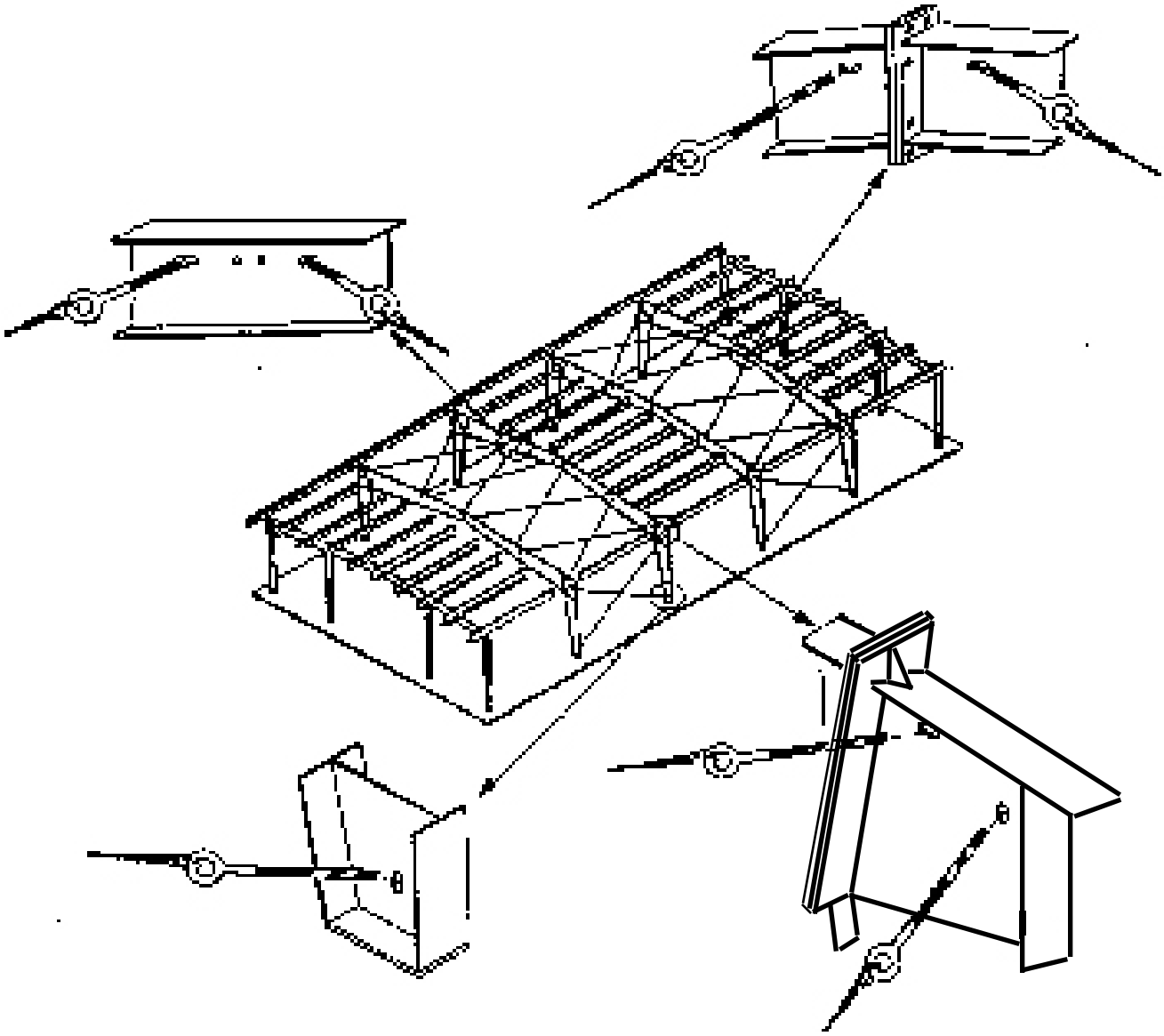

NOTE:
Workers should always use gloves when working on metal frames and sheeting. Always follow all OSHA safety recommendations. **Safety first!**

Technical information contained herein is subject to change without notice.

The diagonal bracing is usually cable or round rod. It should always be installed as shown on the erection drawing and should be tensioned so that the building will not sway or rock when the wind blows. Care should be taken, however, not to over tighten and bend the structural members. The workman should watch the structural members carefully as he tightens the bracing.

Occasionally the bracing in the wall of a building cannot be installed in the specified bay because of doors or other complications. Usually these can be moved to other bays without affecting the structural integrity of the building. However, before moving any wind bracing check with Manufacture. Never modify a IMPACT building without first notifying IMPACT in writing.

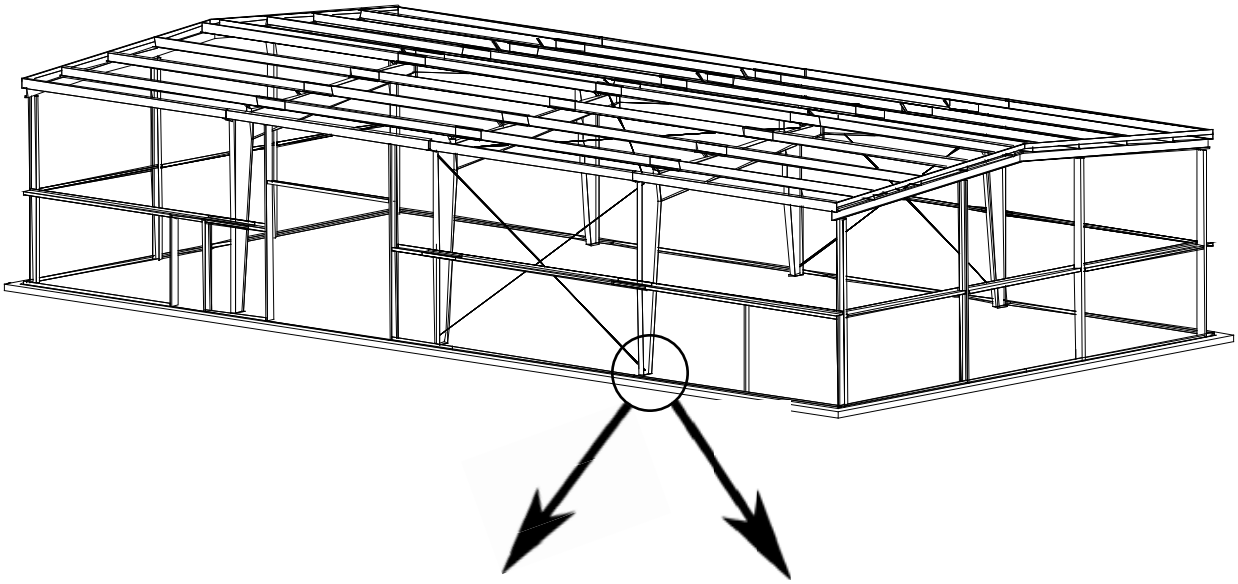

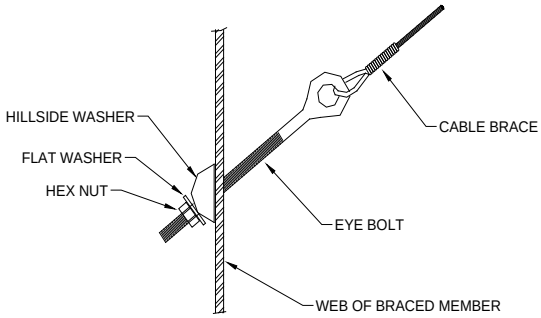

CABLE BRACE TO WEB CONNECTION

OR

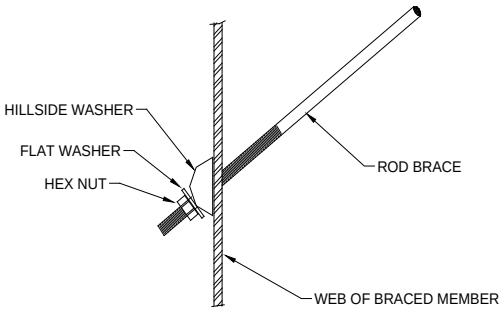

ROD BRACE TO WEB CONNECTION

NOTE:
Follow all OSHA approved approved safety recommendations. **Safety first!**

HILLSIDE WASHER INSTALLATION

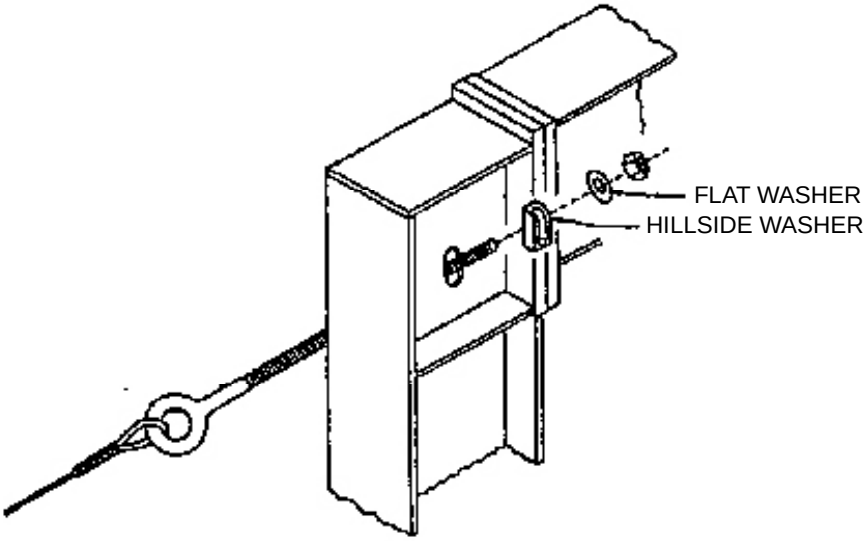

NOTE:
Care should be taken not to over-tighten the wind bracing. Over-tightening the bracing can cause permanent damage to the framing.

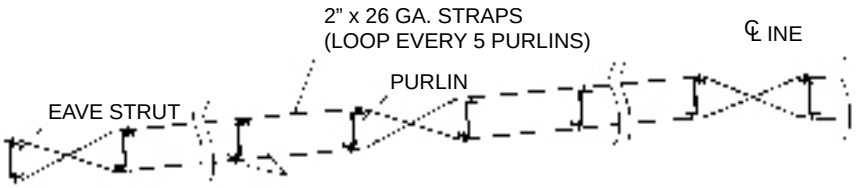

TYPICAL SAG STRAP INSTALLATION

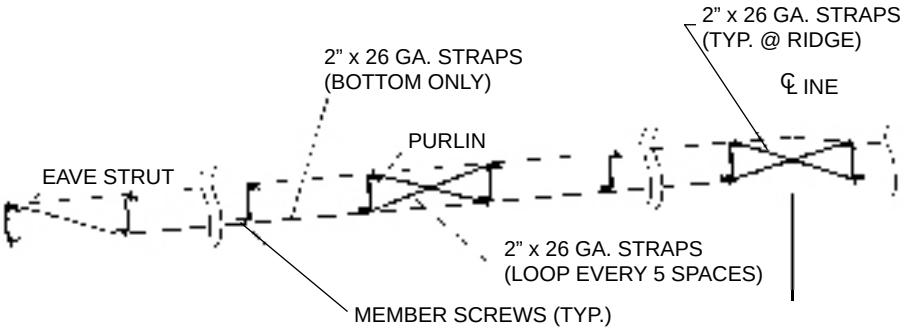

TYPICAL SAG STRAP INSTALLATION (BOTTOM ONLY)

Technical information contained herein is subject to change without notice.

5.0 SHEETING

5.1 GENERAL INFORMATION

All the primary and secondary framing should be erected, plumbed and the bolts properly tightened before the sheeting of the building is started. Framed openings should also be installed, plumbed, squared and tightened before sheeting begins.

IMPACT BUILDING SYSTEMS's wall and roof panels are quality merchandise and should be handled with care. When unpacking panels, pick them up and apart; never slide one panel over another. When lifting panels, support long panels to prevent buckling.

This section contains erection instructions for exposed fastener metal panels only.

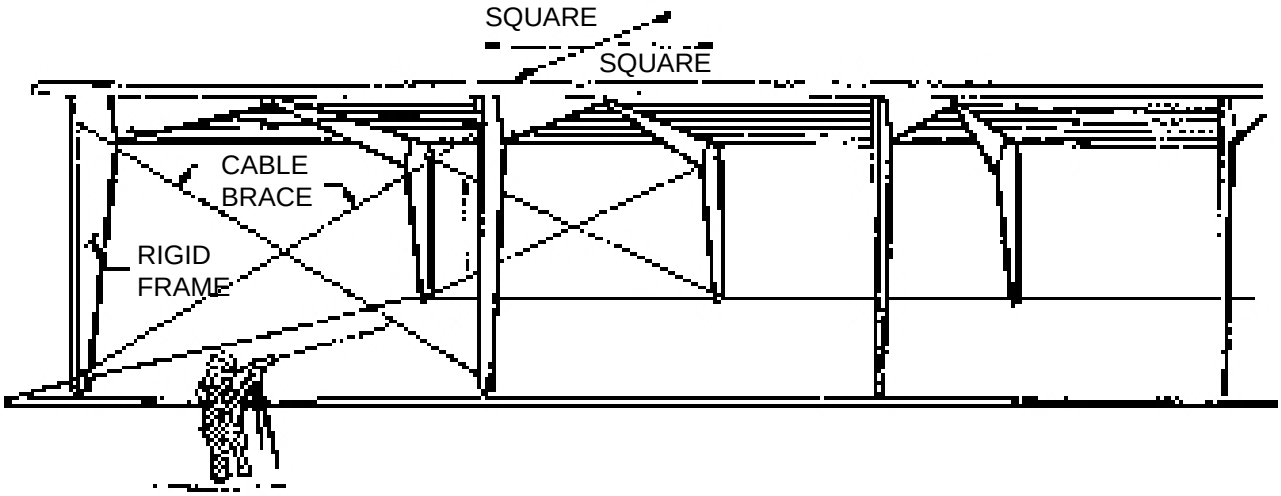

NOTE:
Workers should always use gloves when lifting sheets and follow all OSHA safety recommendations. Safety first!

5.2 “R” PANEL

The **“R”** panels are designed for both roof and wall applications. Its symmetric profile allows for installation without regard to sheeting direction. Sheeting can be started from either end of the building; however, by applying the sheets toward the direction of the prevailing view, the overlap line on the side of every third rib will be less visible. Where heavy prevailing winds occur, place the edge to be lapped into the wind!

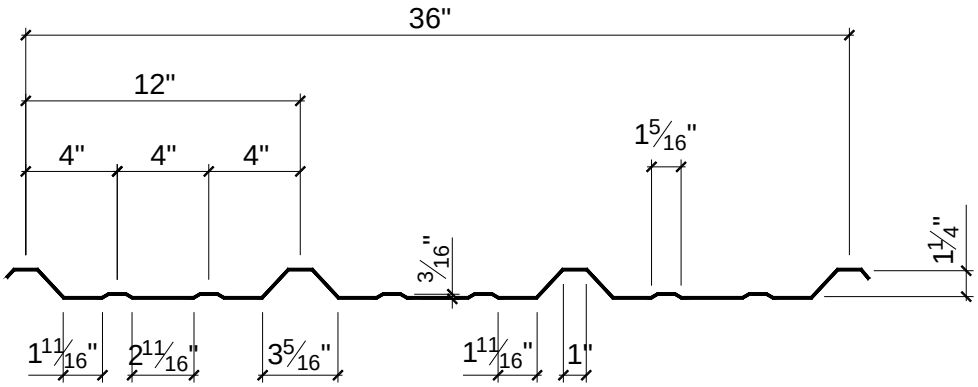

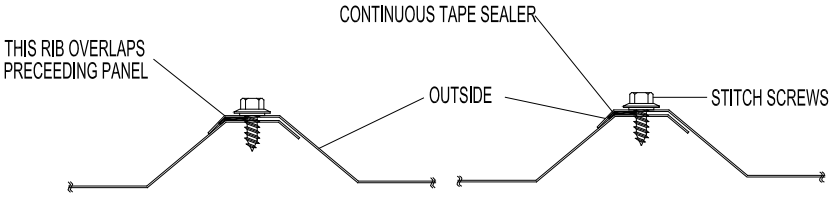

PANEL LAP

DANGER:
Do not step on the major ribs, the side edge or edge of the “R” panel. Always follow an OSHA safety recommendations. SAFETY FIRST!

Technical information contained herein is subject to change without notice.

5.3 “PBR” PANEL

The **“PBR”** panels are designed for roof application, but may on occasion be installed on the wall. The profile is the same as the **“R”** panels except for the addition of the support leg on the leading edge on one side. Erection of this panel requires that the proper direction of its application be established. The support leg allows for better nesting with the overlapping rib of the next panel. As shown below, the installation of the panels would proceed from left to right.

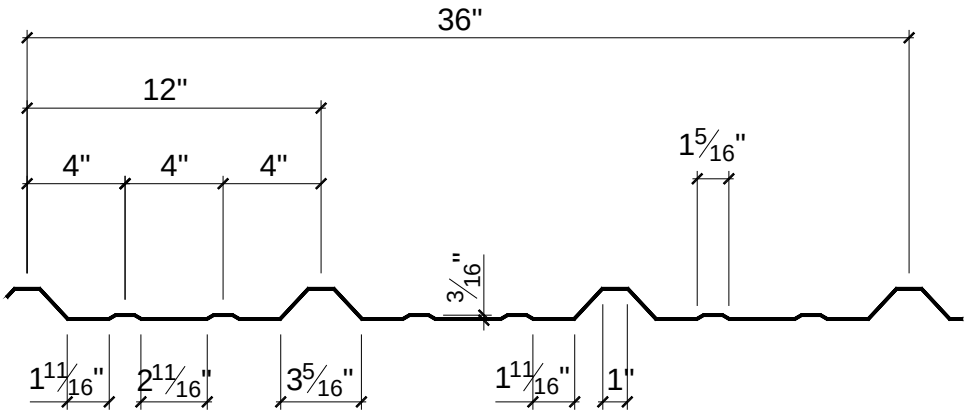

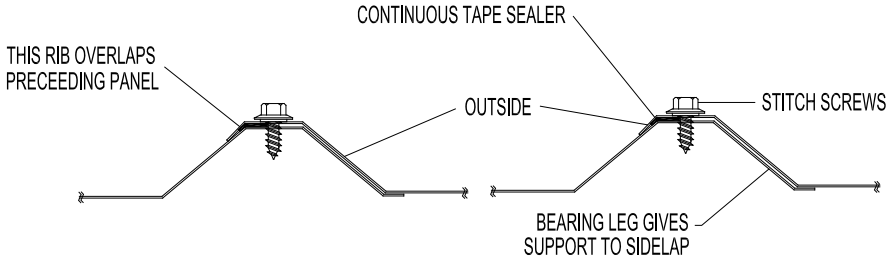

PANEL LAP

DANGER:
Do not step on the major ribs, the side edge or edge of the “R” panel. Always follow an OSHA safety recommendations. SAFETY FIRST!

5.4 "AW" PANEL

The **"AW"** panels are designed for wall applications only. The inverted ribs incorporated into its design produce smooth shadow lines and semi-concealed fasteners. Sheeting can begin from either end of the building, and application of the architectural panel is not directional. Properly installed, the lap edges of the "AW" panel will have minimum visibility.

NOTE:
The **"AW"** adversely affected by an uneven girt line, and / or insulation that causes an uneven girt line. Either situation could cause oil canning in the panels.

The design of the panel lap allows for the panel edge to be visible when installed. Equipment limitations and manufacturing tolerances, as well as other factors can contribute to waviness at the visible edge.

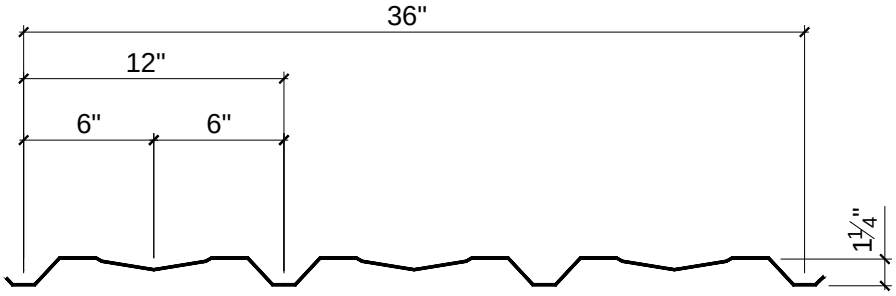

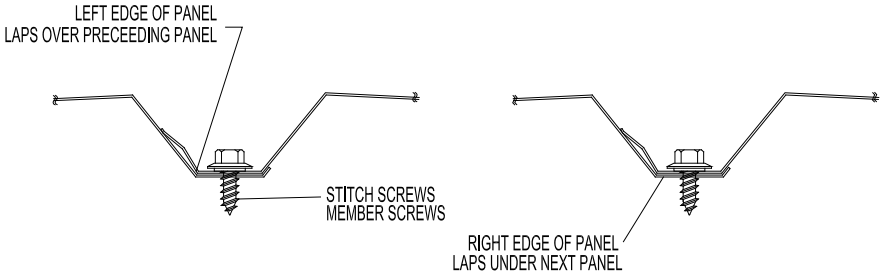

PANEL LAP

NOTE:
Do not apply pressure to the pan of the panels during installation, when the pressure is released, "oil canning" will occur. SAFETY FIRST!

Technical information contained herein is subject to change without notice.

5.5 ROOF & WALL FASTENERS

ROOF OR WALL STITCH / TRIM	TO MEMBER / STRUCTURE
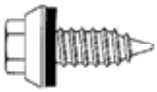 1/4”-14 x 3/4” SELF TAPPING SCREW (LONG LIFE) **FM2S**	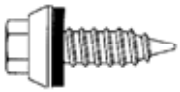 1/4”-14 x 1” SELF TAPPING SCREW (LONG LIFE) **FM2**
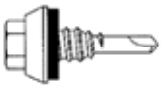 1/4”-14 x 7/8” SELF TAPPING SCREW (LONG LIFE) **FM4**	#12 x 1 1/4” SELF DRILLING SCREW (LONG LIFE) **FM3**
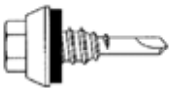 1/4”-14 x 7/8” SELF TAPPING SCREW **FM4A**	#12 x 1 1/2” SELF DRILLING SCREW (LONG LIFE) **FM3A**
14 x 1” SELF TAPPING SCREW **FM10**	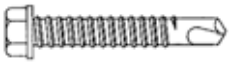 #12-24 x 1 1/4” SELF DRILLING SCREW, TCP5 POINT **FM5** ~for MEZZANINE DECK
14 x 3/4” SELF TAPPING SCREW **FM10A**	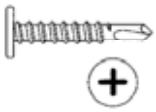 #10 x 1” PHILLIPS PANCAKE HEAD DRILLER **FM7**
	#12-14 x 1” SELF DRILLING SCREW **FM9**
	#12-14 x 1 1/4” SELF DRILLING SCREW **FM9A**
	#12-14 x 1 1/2” SELF DRILLING SCREW **FM9B**

5.6 FASTENER INSTALLATION

Correct fastener installation is one of the most critical steps when installing roof panels. Drive the fastener in until it is tight and the washer is firmly seated. Do not overdrive fasteners: A slight extrusion of neoprene around the washer is a good visual tightness check.

Always use the proper tool to install fasteners. A fastener driver (screw gun) with an RPM of 1700-2000 should be used for self-drilling screws. A 500-600 RPM fastener driver should be used for self-tapping screws. Discard worn sockets, these can cause the fastener to wobble during installation.

CORRECT DEGREE OF TIGHTNESS
(NOTE SLIGHT CIRCLE OF SEALANT)

TOO TIGHT!
SEALANT SQUEEZED TO THIN, EXTRUDES FAR BEYOND FASTENER HEAD

TOO LOOSE!
SEALANT IS NOT COMPRESSED TO FORM SEAL

NOTE:
Always remove metal filings from surface of panels at the end of each work period. Rusting filings can destroy the paint finish and void any warranty.

MASTIC SEALANT

Proper mastic application is critical to the weather tightness of a building. Mastic should not be stretched when installed. Apply only to clean, dry surfaces. Keep only enough mastic on the roof that can be installed in a day. During wan-n weather, store mastic in a cool dry place. During cold weather (below 60) mastic must be kept warm (60—90) until application. After mastic has been applied, keep protective paper in place until panel is ready to be installed.

Technical information contained herein is subject to change without notice.

SCREW ALIGNMENT

Good alignment of the screws, especially on the wall panels, will give a professional appearance to the wall panel installation. One way this can be accomplished is by pre-drilling holes in the panels at identical locations. Up to 15 panels can be stacked together and drilled using a template panel. Use 1/8” or 3/32” diameter drill bit for panel to structural fasteners and a 1/4” diameter bit for the sidelap clearance holes. It is important to clean metal filings off panel surfaces after drilling to avoid rust stains.

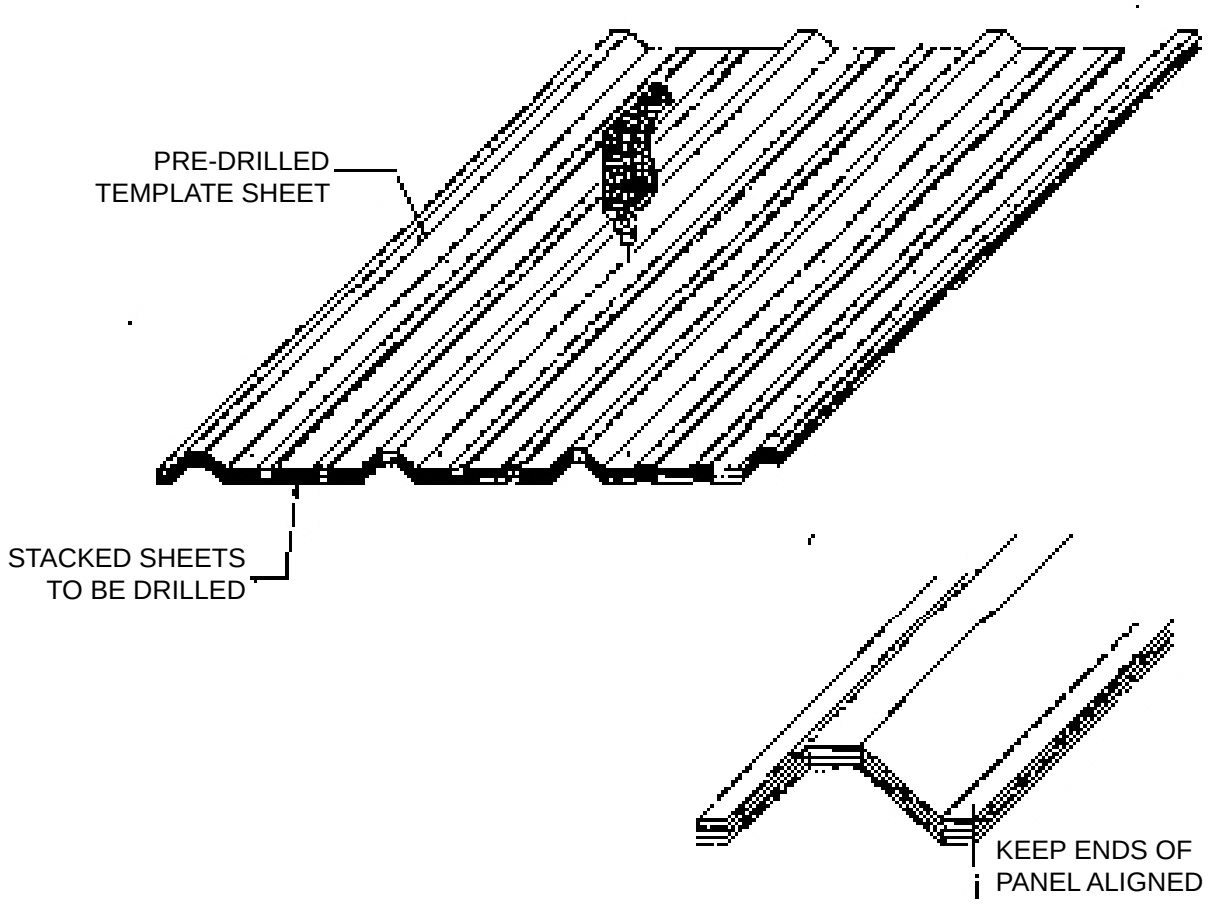

NOTE:
Use OSHA approved eye protection when operating a drill. Electrical tools must be properly grounded. Do not use electrical tools or equipment while standing on wet surfaces. Safety first!

The template panel should be laid out for the proper screw locations in accordance with the building erection drawings. Since pre-drilling will “hand” the panels, it will also be necessary to select the end of the building from which the paneling is to begin. Before drilling the template panel. it should be checked for oroper hole locations against the building framework. Be sure there is no excessive deflection in the purlins and girts.

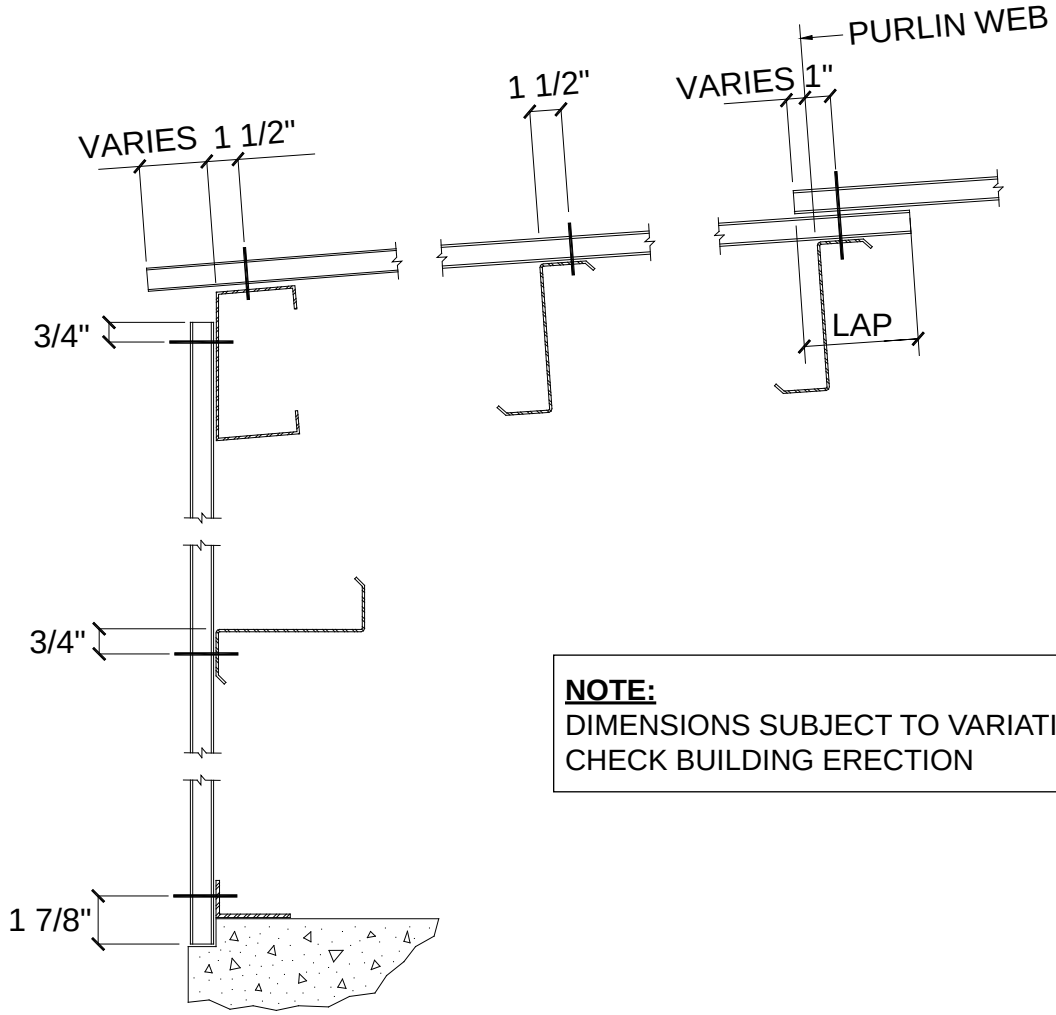

NOTE:
DIMENSIONS SUBJECT TO VARIATIONS, CHECK BUILDING ERECTION

Technical information contained herein is subject to change without notice.

5.7 ALIGNING THE GIRTS

Installation of the building walls is generally done before the roof. Before starting the wall installation, check to be sure that the eave strut and girts are straight and plumb. One method of aligning the girts is to cut temporary wood blocking to the proper length and install between the lines of girts.. This blocking can be moved from bay to bay which will reduce the number of pieces required. Normally, one line of blocking per bay will be sufficient. Banding can also be used to hold the girls straight and plumb.

NOTE:
Temporary girt blocking is not recommended on concealed fastener panels. The removal of the the block after panel intallation will cause oil canning.

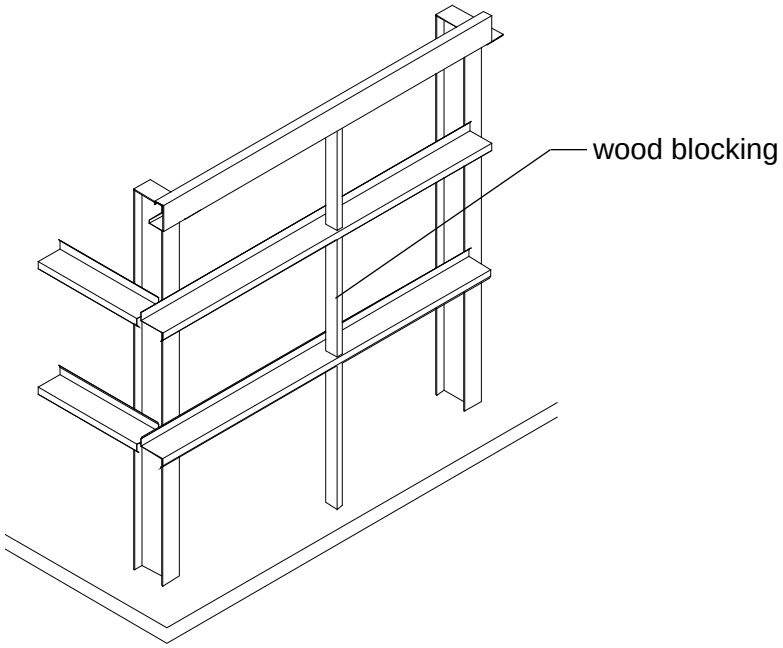

NOTE:
Do not allow blocking tobecome a falling hazard. Workers should wear OSHA approved hard-hats. Girts should never be used as a climbing ladder. Damage to girl clips, as well as injury to worker may result. **Safety first!**

Wood blocking could a 2 x 4 wood, cut to girt spacing length. Refer to the cross section or wall framing elevations drawing to determine the girt spacing.

5.8 WALL INSULATION

There are many types of insulation installed in pre-engineered steel buildings. However, fiberglass blanket insulation is the most common type used, and these instructions pertain to this type only. One side of the blanket insulation should have a vapor barrier that must face the inside of the building regardless of whether the insulation is for heating or cooling.

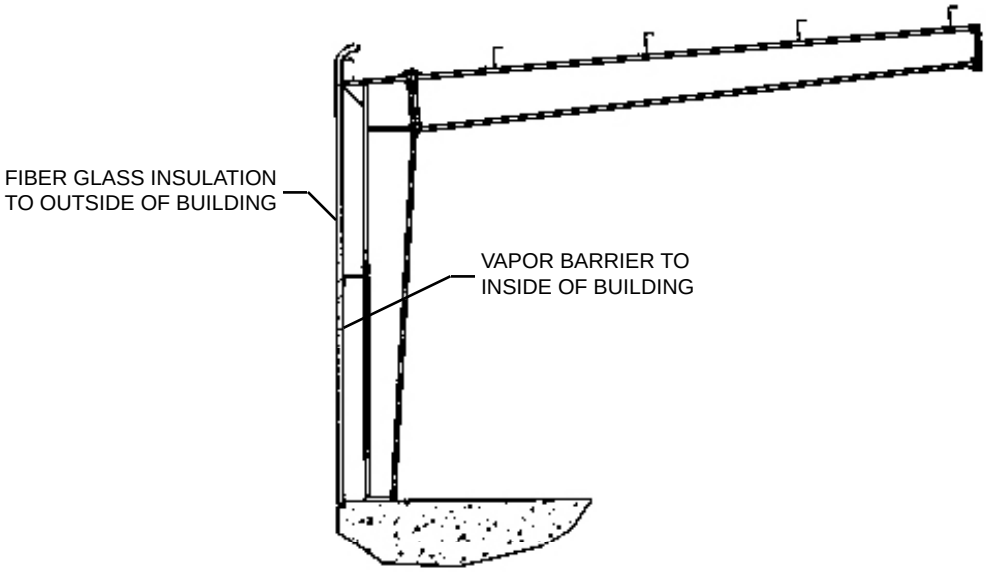

WALL INSULATION INSTALLATION

Cut the insulation to length allowing an additional **6" or more to facilitate** handling. The wall panel can be used as a guide.

NOTE:
The insulation must compress between the girt and the wall during installation. Insulation too thick or dense to compress adequately will induce waviness or oil canning in certain types of wall panels.

Technical information contained herein is subject to change without notice.

The first run of wall insulation should be installed so that its forward edge is just ahead of the leading edge of the wall panel. The most widely used procedure is to use a 4 ft. starter run, then switch to 3 ft. or 6 ft. runs. This keeps the forward edge of the insulation 1 ft. ahead of the wall panel for joining the next blanket.

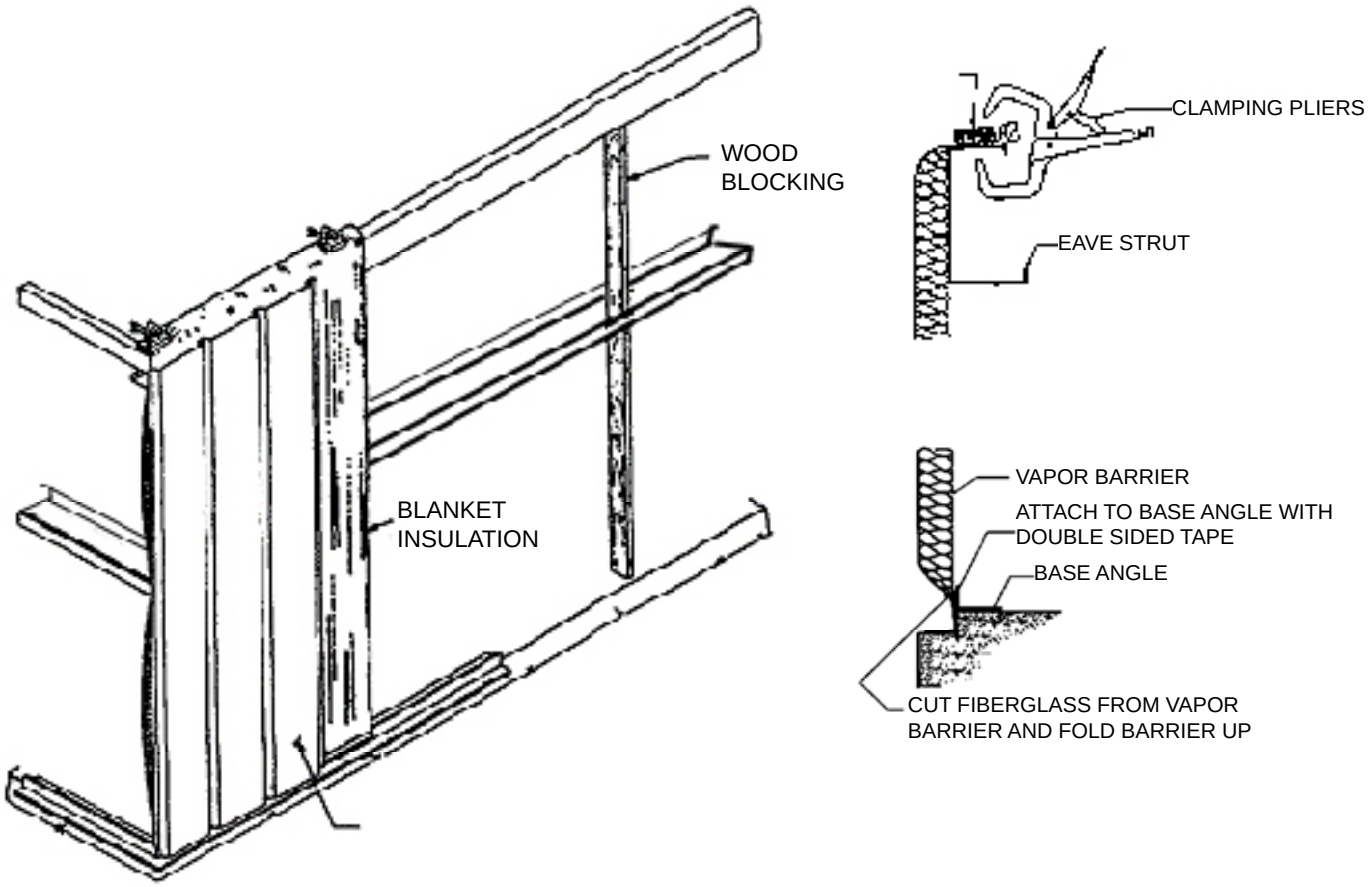

NOTE:
Do not allow the insulation
to wick moisture from the floor!

NOTE:
Insulation has no load bearing strength. Do not lean or prop material against wall insulation. Observe all proper safety procedures when handling fiberglass insulation, such as dust masks, gloves, and long sleeved shirts, to minimize contact with the insulation fibers. **Safety first!**

5.9 ROOF INSULATION

Pre-cut roof insulation to reach from eave to eave allowing approximately 2 feet of additional length to facilitate handling. Hold Insulation at one sidewall and roll out insulation across the purlins, vapor barrier to the inside of the building. Stretch the Insulation to provide a tIght and smooth inside surface. Weights clamped to each end can be used to hold insulation taut.

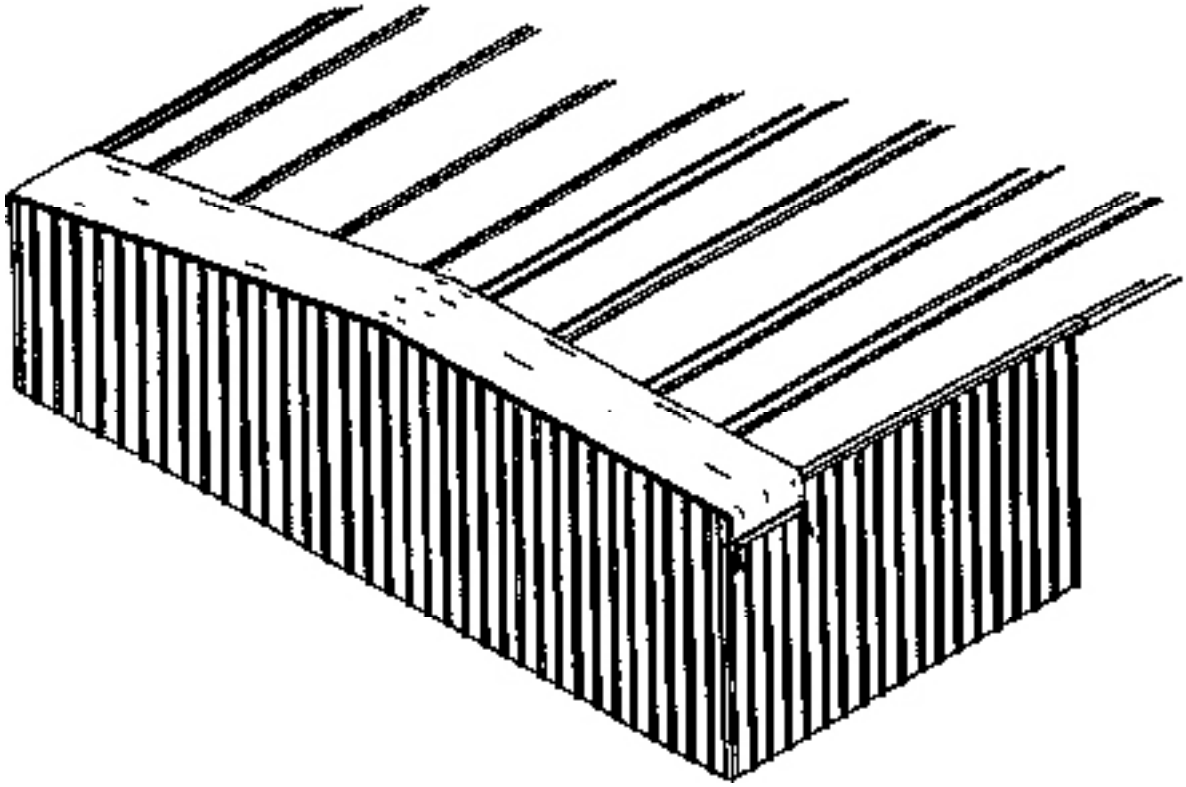

NOTE:
Insulation has no load bearing strength. Maintain body weight on approved scaffold or walk boards. Follow all **OSHA** recommended safety instructions regarding safety harnesses and/or nets to protect from falls! **Safety first!**

Technical information contained herein is subject to change without notice.

Double sided tape or contact adhesives can be used to hold insulation in place while the roof sheets are being installed. Trim excess insulation to the edge of the eave trim and cut fiberglass approximately 4 inches from end leaving only facing. Fold facing over end of blanket insulation to seal the ends.

NOTE:
Double sided tape and patching tape are supplied by erectors!

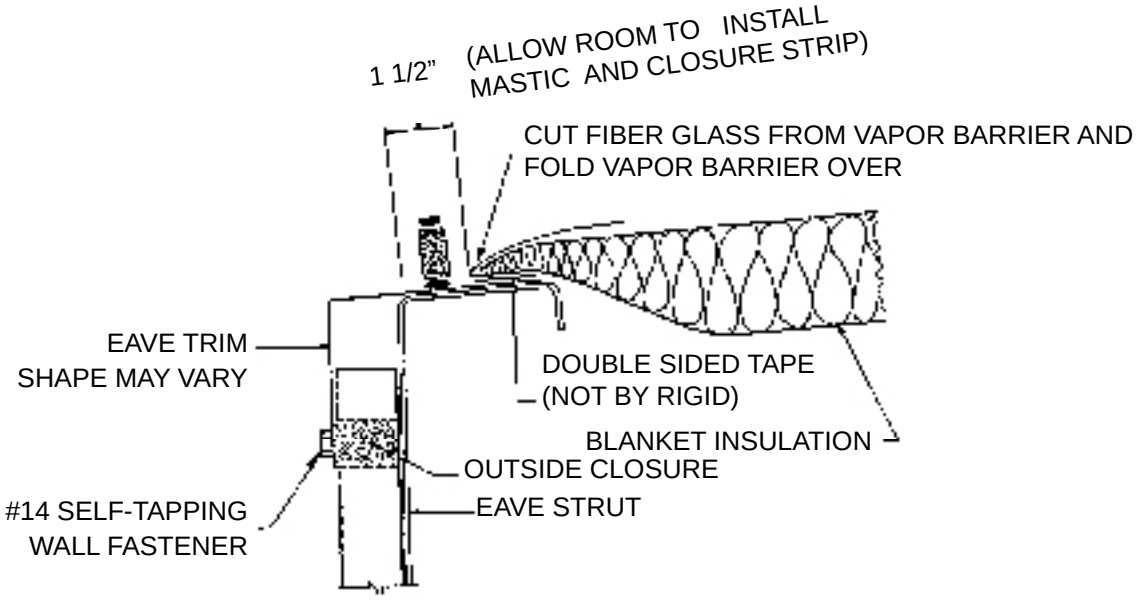

NOTE:
Do not install more insulation on the roof than can be covered by roof panels before the work period ends. Do not allow the insulation to become wet. **Safety first!**

A four foot starter roll of insulation is recommended to maintain the insulation joint ahead of the sheeting edge. Seal insulation sidelap joints with adhesives or fold and staple per manufacturer's instructions. As on the walls, the general sequence is to install the roof sheets in conjunction with the insulation.

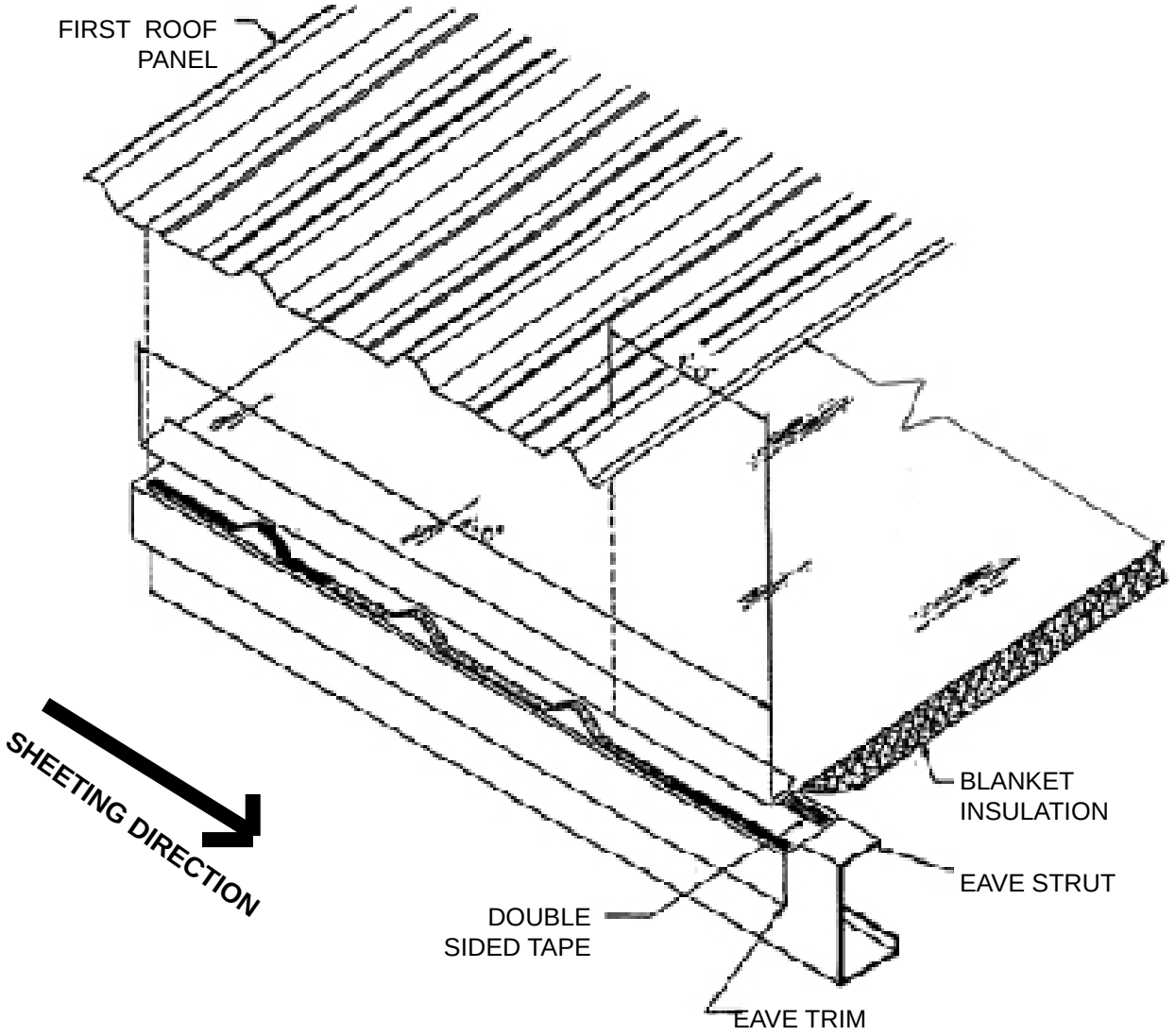

The insulation sidelap must be sealed to prevent condensation and minimize temperature loss at laps.

NOTE:
Wipe oil and other slippery substances from roof panels. Do not step on rib of panel, near a crease in the panel,near a side edge or within five feet of the end of unsecured panel. Use OSHA approved tie offs, netting or rails when working on roof. Insulation has no load bearing strength. Maintain body weight on approved scaffold or walk boards.**Safety first!**

Technical information contained herein is subject to change without notice.

5.10 INSTALLATION OF WALL PANELS

Adjoining panels are installed with the pre-drilled overlapping rib toward the last erected panel. Position panel to structural making sure that it is kept plumb. Drill structural if required and install fasteners at lapped rib. Check for proper coverage and correct as necessary. Install remaining fasteners. Note that clearance holes in overlapping rib must be pre-drilled.

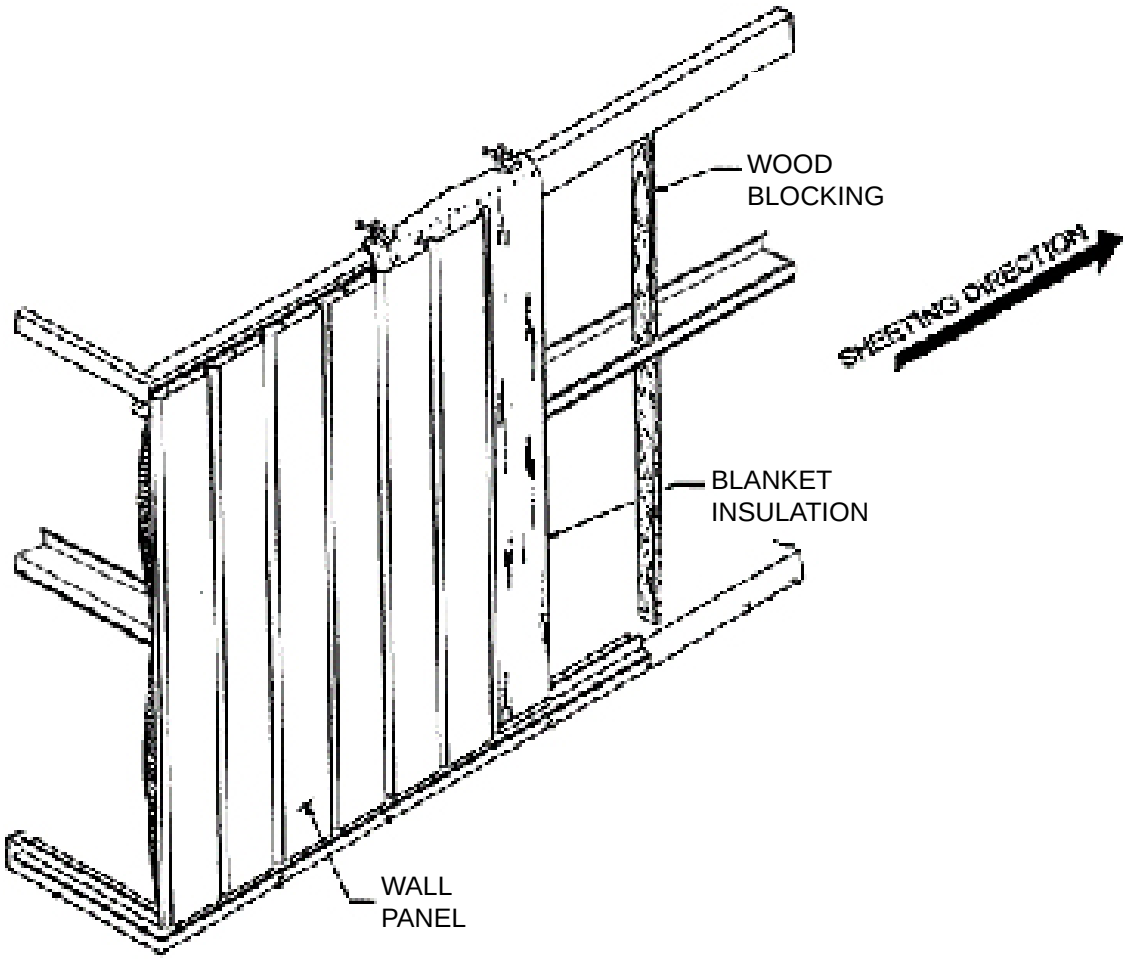

NOTE:
Wear **OSHA** approved eye protection when operating drill. Electric tools must be properly grounded. Do not use electrical equipment while standing on wet surfaces. **Safety first!**

Backlapping the panels 1 foot or 2 foot is routinely done to match panel coverage with the building width and length. On the sidewall this is done with the last panel installed. On the endwall this is normally done near the center and will be marked on the erection drawings.

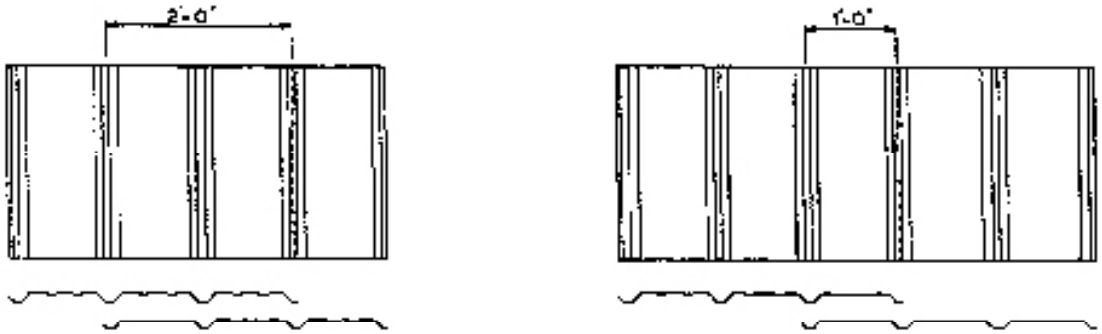

SIDEWALL

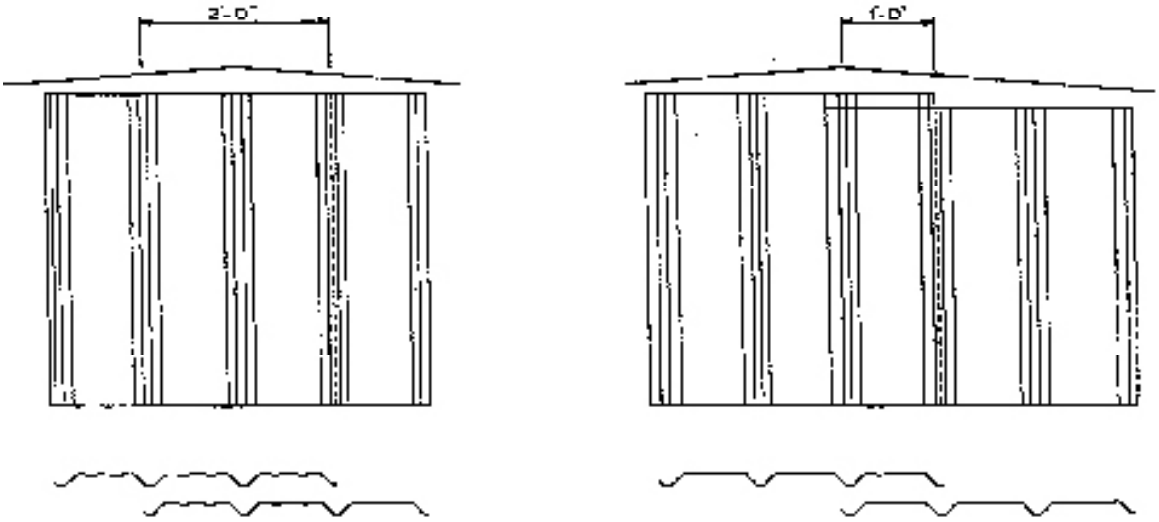

ENDWALL

<u>NOTE</u>:
Always follow all **OSHA** safety recommendations. Remember, **<u>Safety first!</u>**

Technical information contained herein is subject to change without notice.

5.11 SAFETY PRECAUTIONS FOR ROOFING WORK

Manufacture strongly recommends that erection employees be continuously trained and re-trained in safe and productive work practices. Working on the roof area in the installation of roof structurals, insulation or roof panels requires proper training, correct equipment and constant alertness to minimize the danger of falls. Hard hats should be wom on job sites to prevent injury from falling objects. Safe work practices on all erection duties should be carefully reviewed with erection crews prior to beginning each job

NEVER STEP ON SKYLIGHTS OR TRANSLUCENT PANELS!!!!!!

Panels May Collapse If Not Properly Secured

Roof panels must be completely attached to the purlins and to panels on either side before they can be a safe walking surface. Skylights or translucent panels can never be considered as a walking surface.

Partially attached or unattached panels should never be walked on!

Do Not:
1.Step on rib at edge of panel.
2.Step near crease in rib at edge of panel.
3.Step within 5 feet of edge on unsecured panel.

A single roof panel must never be used as a work platform. An OSHA approved runway should be used for work platforms! (consult **OSHA** Safety and Health Regulations for the Construction Industry).

Safety first!

SAFETY PRECAUTION!!! PANELS MAY BE SLICK

Because of the demands of the manufacturing process, oil has been applied to the coil stock to protect the coil, as well as the finished panel during manufacturing, shipping and storage! Metal panels must be wiped clean prior to panel installation.

NOTE:
Always wear rubber sole work boots! When on the roof, use **OSHA** approved protection devices such as safety lines, safety nets or catch platforms.

UNSECURED PANELS MAY SLIP IF STEPPED ON!

Employees should be continuously warned to never step on a single unsecured roof panel, or a stack of roof panels laying unattached on the pu rlms.

Secure each end of the panel with clamps or appropriate fasteners and place walkboards of adequate size and strength in the flat of any panels not fully secured to the purlins and supported by panels on each side. Walkboards should run the full length of the panel and be fastened together by drilling a hole near the end of each board and tied with rope to the next board.
Cut a groove in the bottom of each board so that the board will lie flat and not tip back and forth because of the rope.

SAFETY NOTES

All safety precautions referred to throughout this manual, as well as all **OSHA** safety requirements or other customary or statutory requirements must be adhered to in order to maximize employee safety.

Daily meetings describing safe work procedures, use of hard hats, rubber sole shoes for roof work, proper equipment for handling material and protection devices are recommended. **Safety first!**

Technical information contained herein is subject to change without notice.

5.12 PREPARING THE EAVE

After installing the first run of insulation, prepare the eave for the first roof panel by applying tape sealant along the eave outside of the insulation and leaving release paper in place. Sealant must be applied in a straight line and without voids. Do not stretch the sealant. Use a knife to cut if necessary. Cut an inside closure strip as shown and place starter piece on top of the sealant (removing protective paper from the sealant only as required). Align the major rib of the closure with the edge of the endwall roof line. Splice a full closure to the starting closure and apply along the top of the eave sealant. If roof is subject to ice and snow build-up, the splice in the closure strip must be caulked to insure weathertightness.

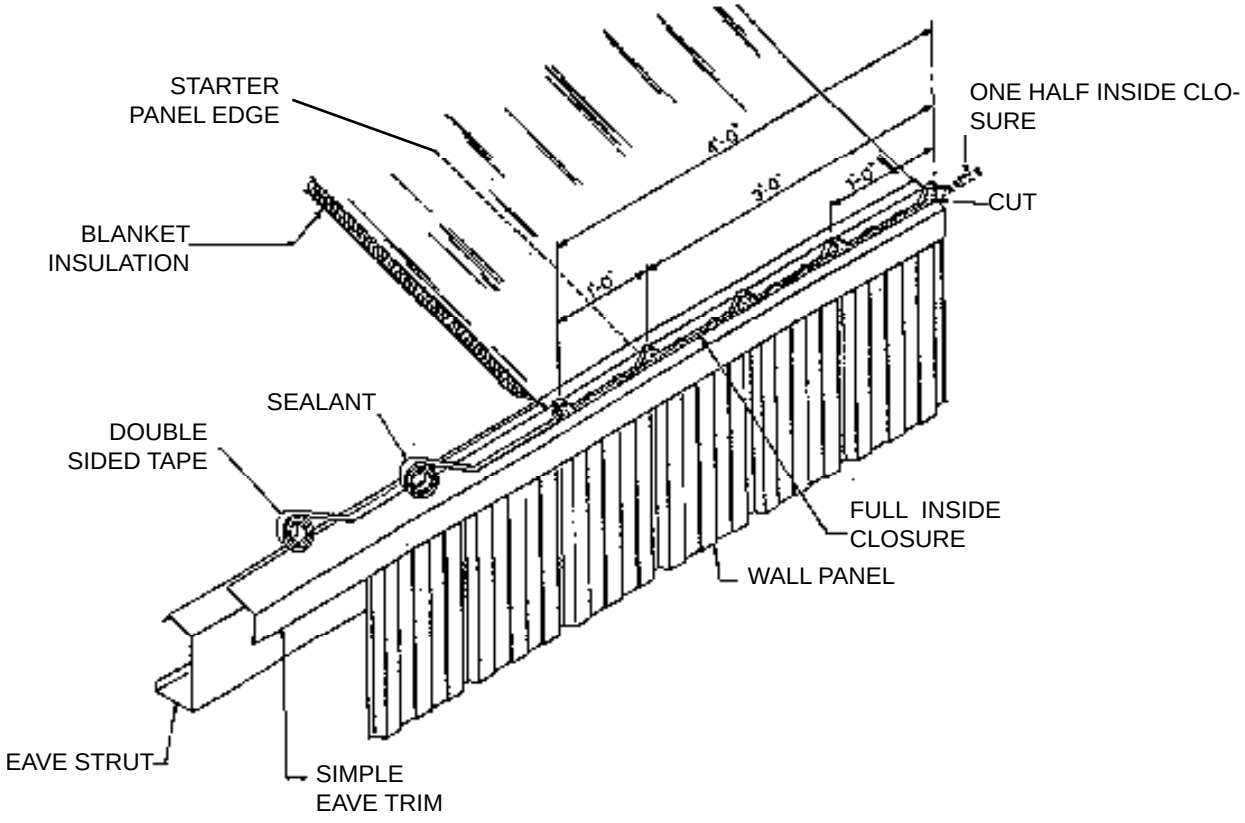

NOTE:
Insulation has no load bearing strength. Maintain body weight on approved scaffolding or walk boards. **Safety First!**

Along the top of the closures that have been placed along the eave, apply a second run of tape mastic. Prior to removing paper backing, check and mark for proper alignment of the first roof panel.. Note that self-tapping screws will require holes be drilled in the supporting structure prior to installation. Continue mastic and closure run along eave in preparation for the next roof panel.

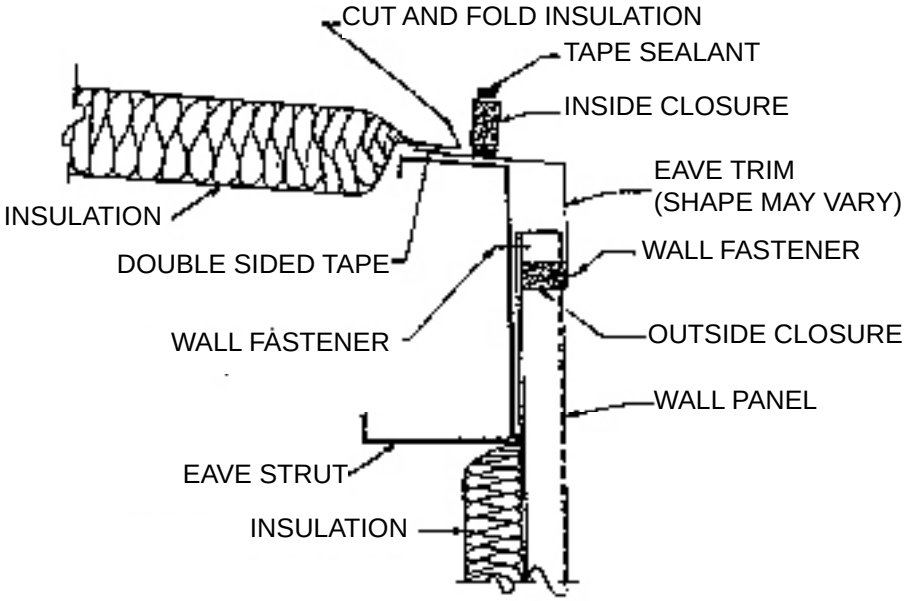

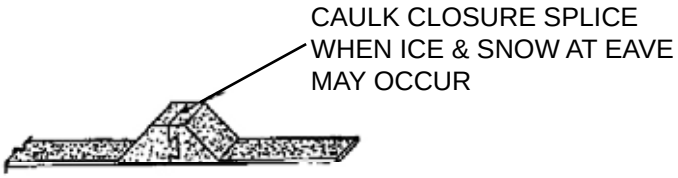

* Outside closure is optional

Technical information contained herein is subject to change without notice.

5.13 INSTALLATION OF FIRST ROOF PANEL

Once the eave is prepared, the first roof panel may be installed. Check the erection drawings to determine the roof overhang at the eave. Set the roof panel in place over the inside closure (after removing the paper from the mastic) insuring the major ribs of the panel nest properly with the inside closure. Align the panel edge with the edgė of the endwall roof line. With the panel properly placed, secure the panel to the structure with appropriate fasteners. If the building requires more than one panel per run, do not install fasteners at the purlin located at the upsiope end of the panel. These fasteners will be installed after the overlapped panel is installed.

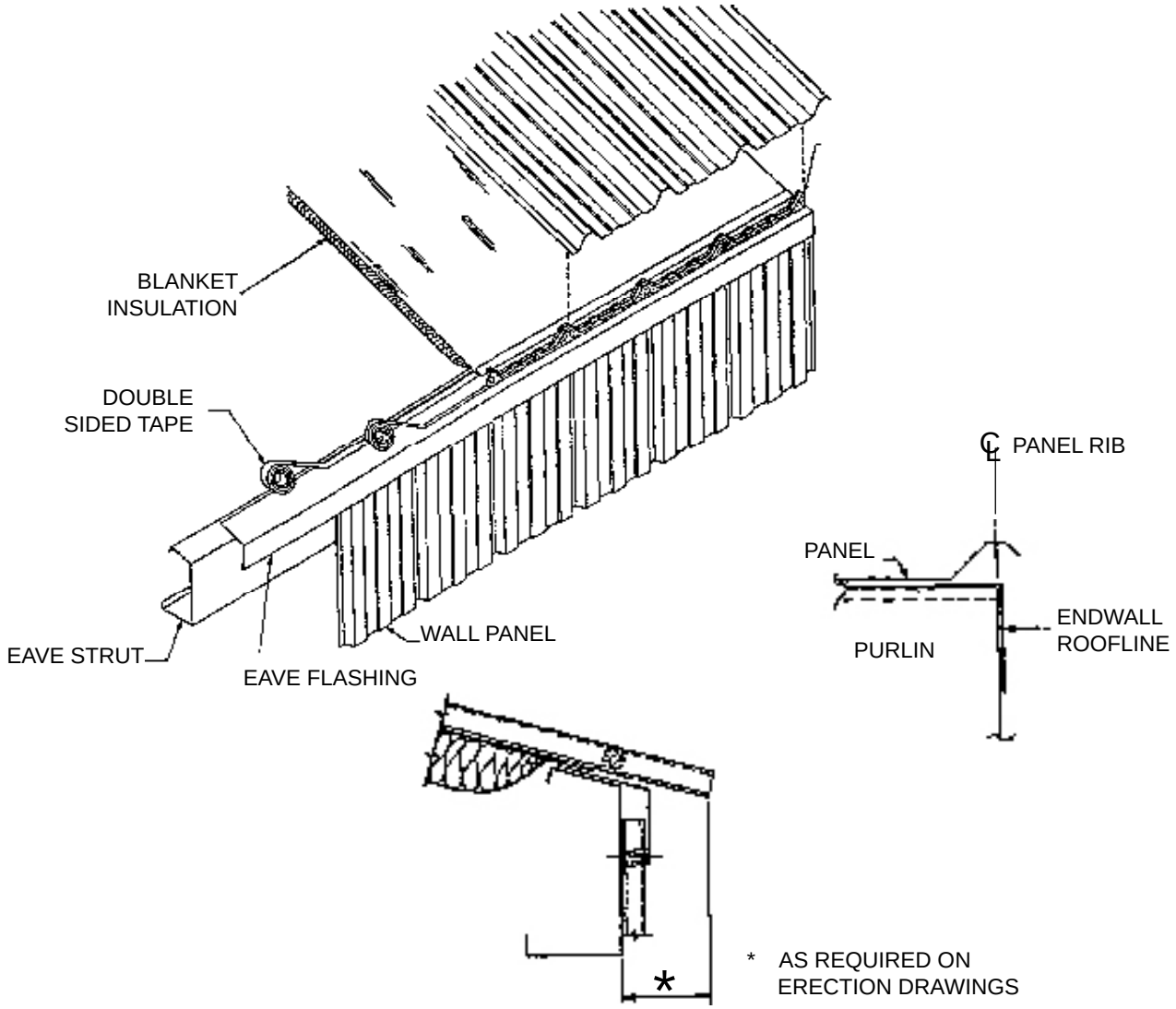

NOTE:
Do not walk on unsecured panels. substances from roof panels.
Safety first!

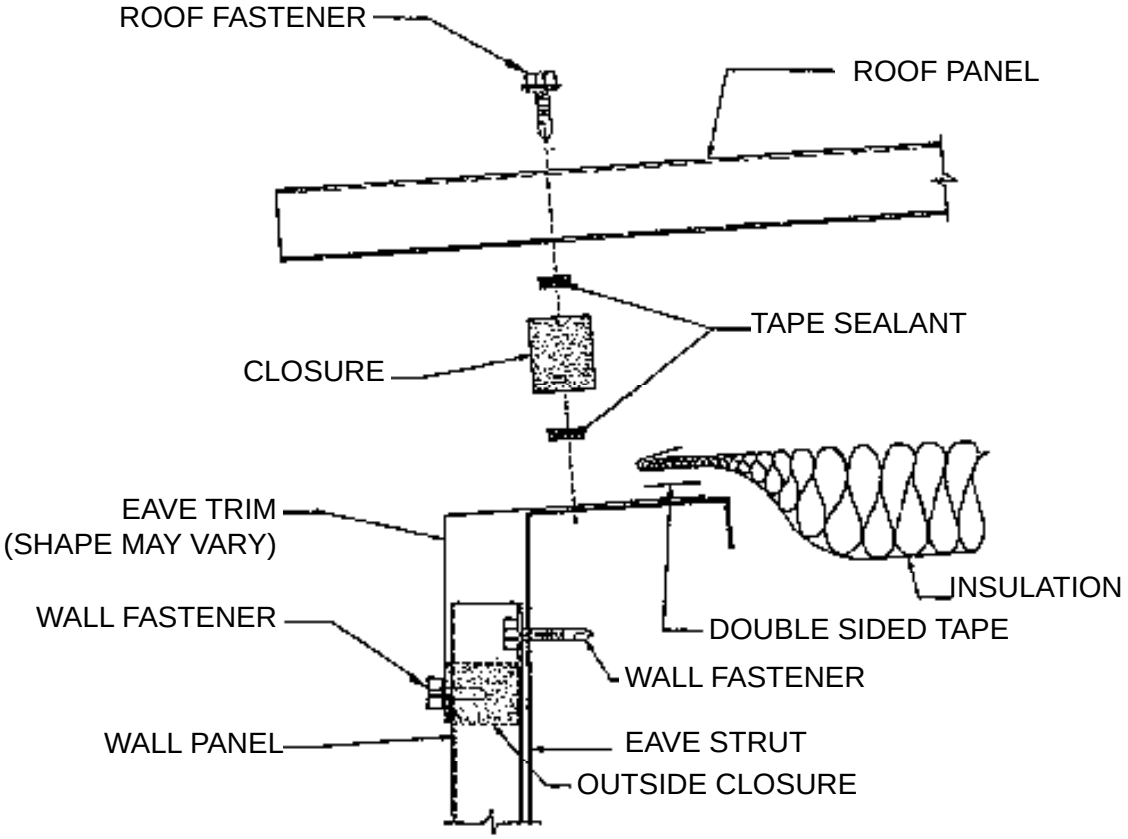

SECTION AT EAVE

Technical information contained herein is subject to change without notice.

5.14 SEALING THE SIDELAP

Apply the sidelap tape sealant to the weather side edge of the lower panel's major rib as shown. The tape sealant should only be applied to clean, dry surfaces. With the release paper in place, press firmly along the length of the sealant to insure proper adhesion. In removing the protective paper from the tape sealant, care should be taken not to pull the tape sealant away from the panel. Install the adjoining panel positioning the overlapping rib with care. Drill, at the center of the clearance holes in the overlapping panel, 1/8" pilot holes for the lap fasteners. Stitch the lap with the No. 14 self-tapping fasteners supplied with the job. Never allow the sealant to be placed in other locations.

PREVAILING WIND DIRECTION

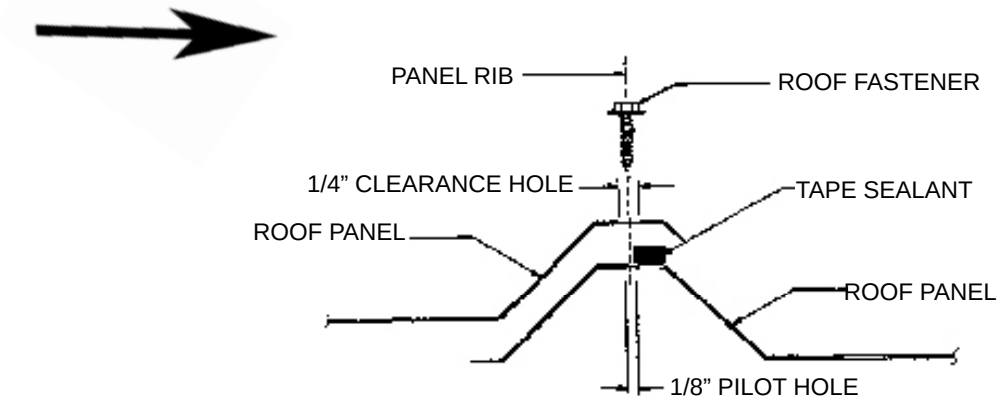

NOTE:
Use **OSHA** approved eye protection when operating a drill. Sweep up all drill shavings from panels at end of each work period to minimize surface rust and damage to panel finish **Safety first!.**

5.15 SEALING THE EAVE

Tape sealant location at the eave is critical. To insure a weather tight seat, the sidelap sealant must extend down from the top of the rib to the sealant on the eave closure. The sealant extension must splice into the eave mastic.

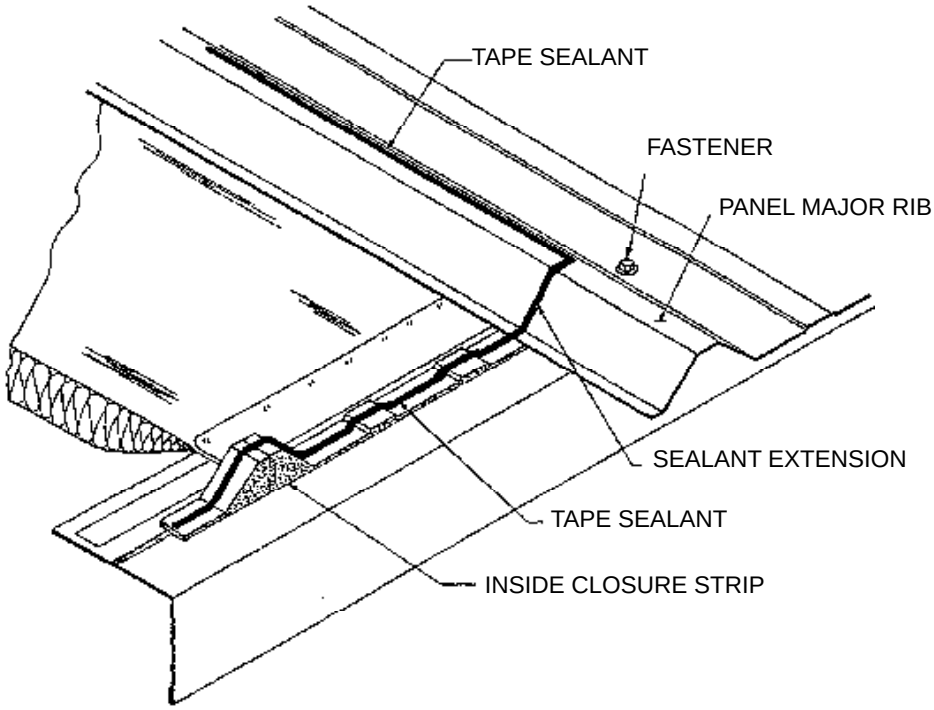

NOTE:
Workers should maintain a constant awareness of their location in relation to the roof edge at all times. Follow all **OSHA** recommended safety suggestions. **Safety first!**

Technical information contained herein is subject to change without notice.

5.16 SEALING THE ENDLAPS

At the panel endlaps place a run of tape sealant across the full panel width 1/2” below the fastener line. The panel endlaps have a 6” minimum overlap located over a purlin as shown. Locate the fasteners 1 above the purlin web according to the fastener layout.

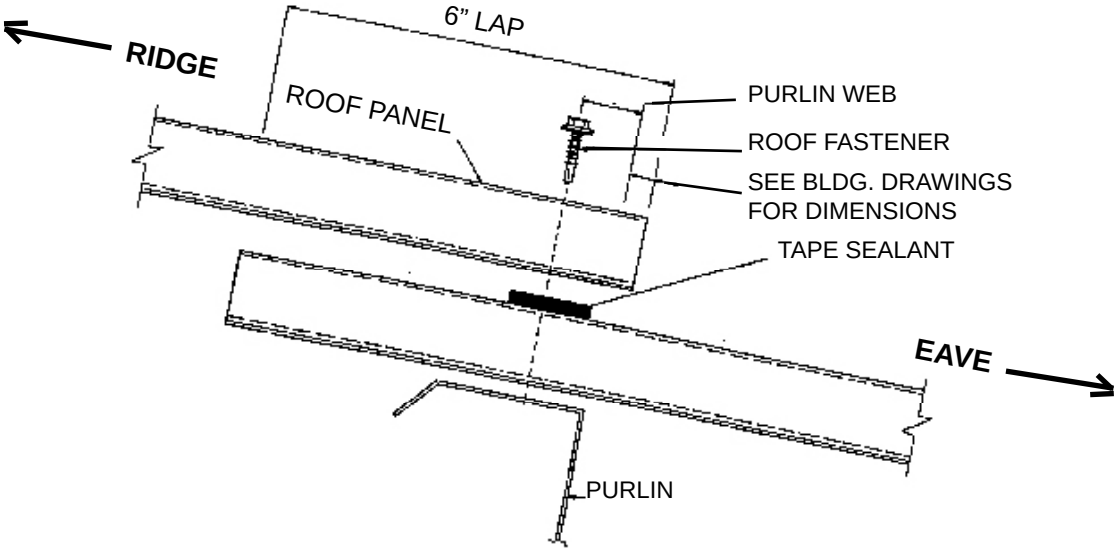

NOTE:
Do not step on panel endlaps until fully secured with fasteners
Safety First!

5.17 PANEL ENDLAPS

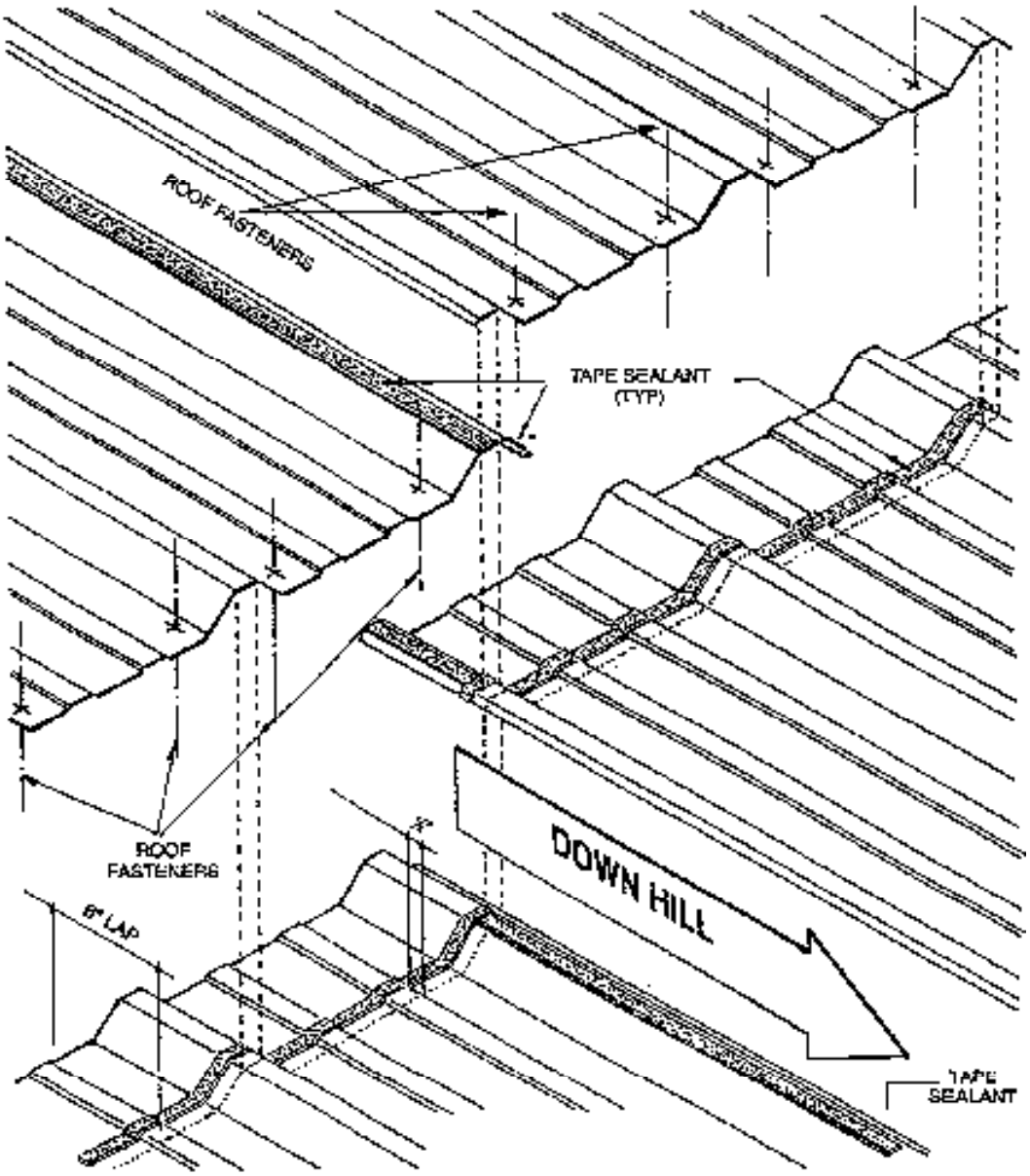

*** Apply tape sealant to far side of major rib to complete seal at Panel Lap.**

<u>NOTE</u>:
Each worker should be trained to use the safest and most productive erection techniques. **<u>Safety first</u>!**

Technical information contained herein is subject to change without notice.

5.18 ROOF SHEETING SEQUENCE

It is recommended that both sides of the ridge of a building be sheeted simultaneously. This will keep the insulation covered for the maximum amount of time and the panel ribs can be kept in proper alignment for the ridge panel. Check for proper coverage as the sheeting progresses. *Note panel sheeting sequence below!*

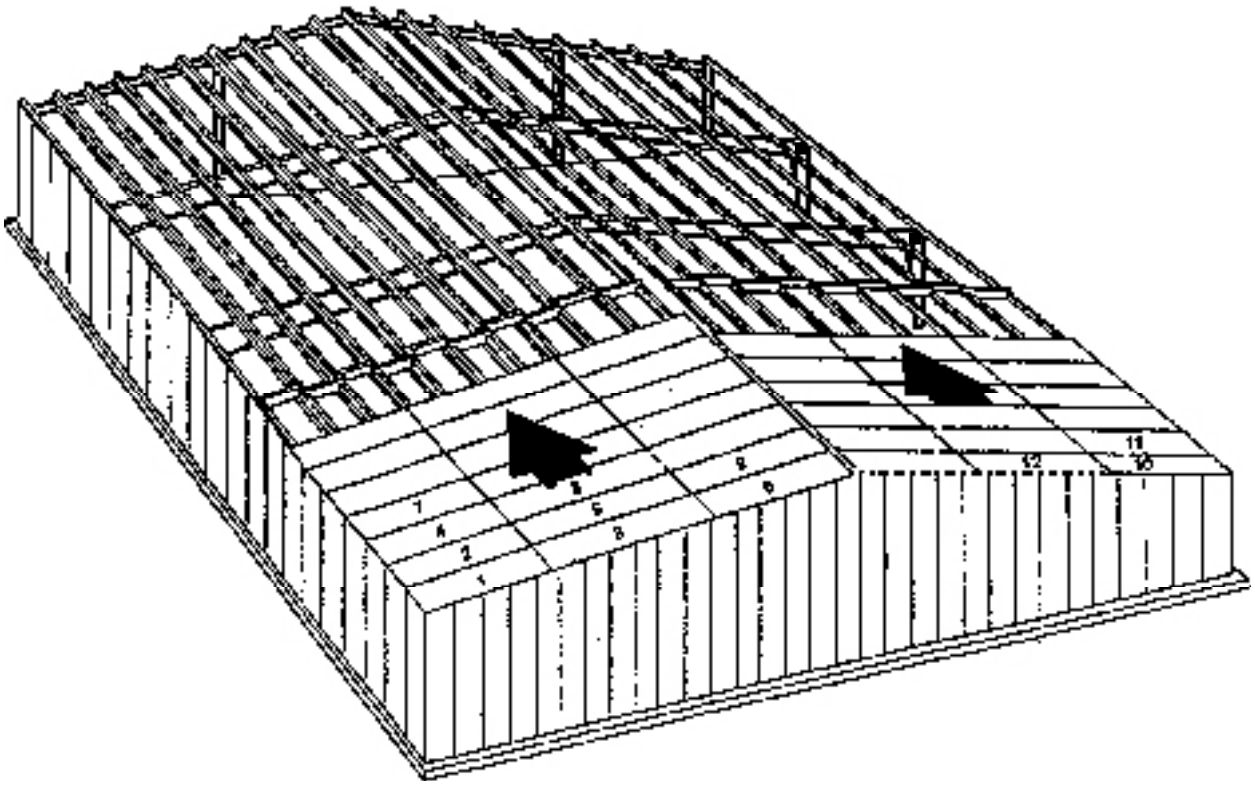

NOTE:
If oil or other slippery substances are present on the roof panels, wipe them clean immediately to prevent slipping or falling. Workers should maintain a constant awareness of their location relative to the roof edge. Use **OSHA** approved tie offs, netting's or rails when working on roof surfaces. **Safety first!**

5.19 INSTALLATION OF ROOF PANELS

With the first panel run installed and secured, and sidelap sealant applied, the second panel run may be started. Prepare the eave with an inside closure and tape sealant as shown previously. Position the panel so that the overlapping ribs will nest properly. Be sure to check for proper overhang and panel coverage.

Stitch the major ribs of the two panels together, and fasten panel to the purlins.

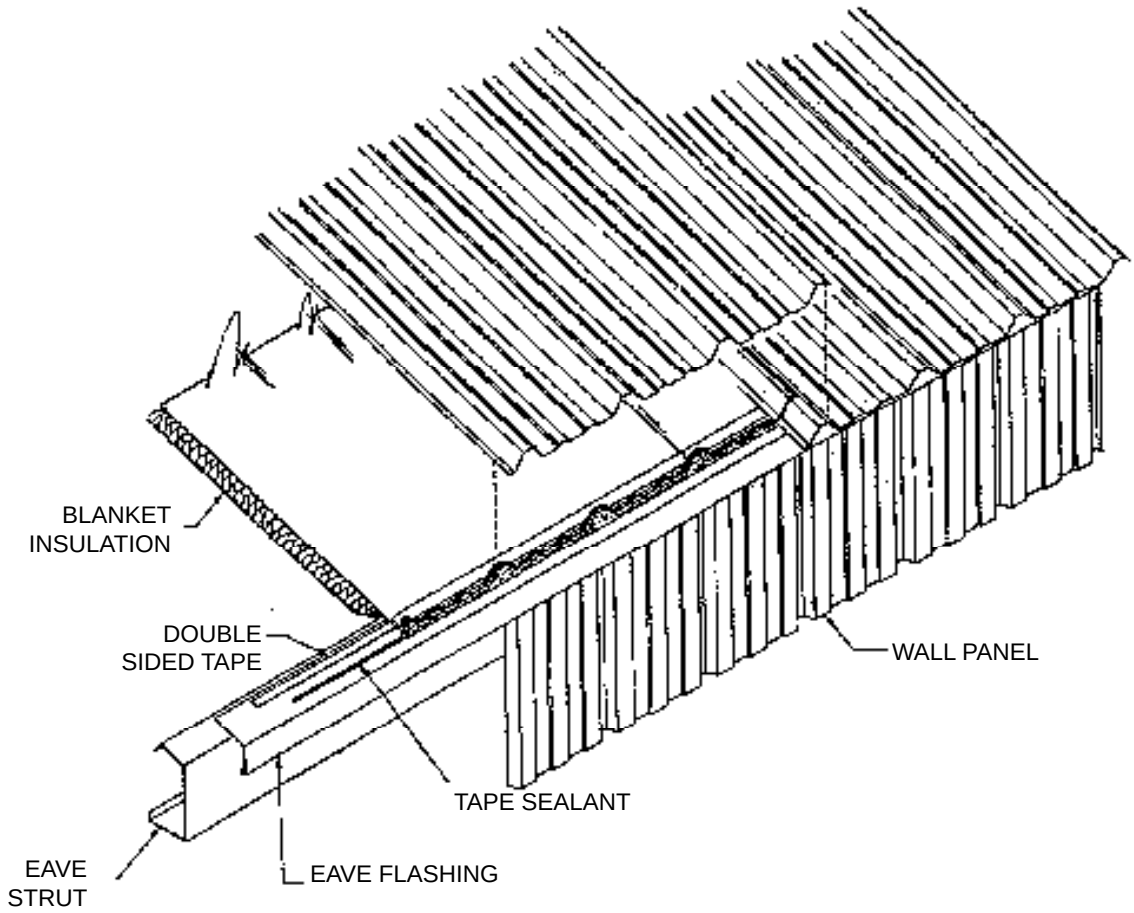

NOTE:
Sweep up all drill shavings from panels at end of each work period to avoid surface rust and damage to panel finish.

Technical information contained herein is subject to change without notice.

5.20 PEAK PANEL INSTALLATIONS

Die formed ridge panels are to be installed as each side of the roof is sheeted. This will aid in keeping both sides of the roof aligned. After having installed a run of panels on each side of the roof, apply sealant to the panels as shown. Set die formed ridge panel in place and install lap and purlin fasteners. Apply tape sealant along the top of the leading rib to prepare for the next sidelap.

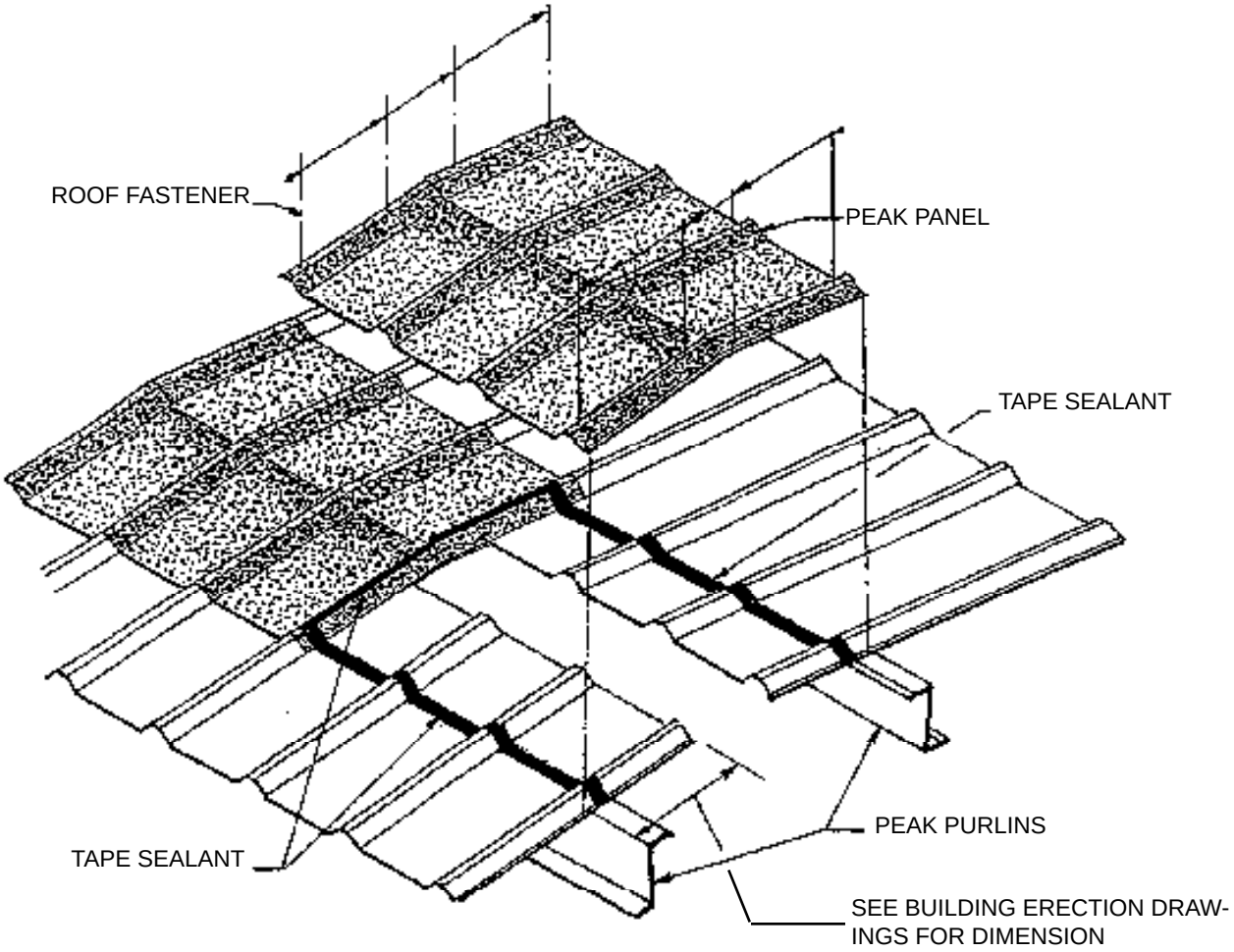

NOTE:
Do not walk on unsecured ends of panels.**Safety first!**

5.21 SKYLIGHT INSTALLATION

Skylight panels are installed using the same procedures as a steel panel. Care should be taken when installing fasteners in the skylights to avoid cracking the material. Pre-drill W diameter fastener clearance holes in the overlapping sidelap and endlap.

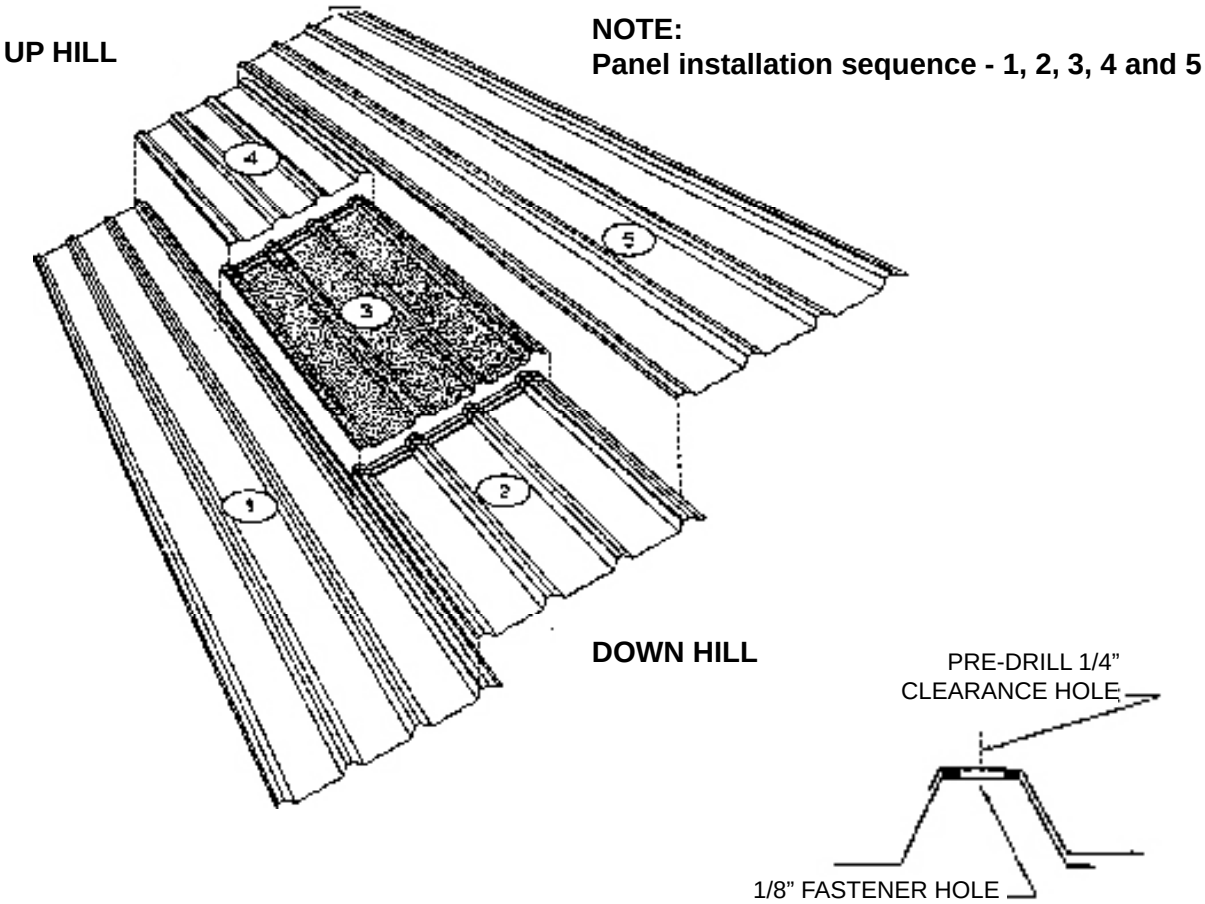

SIDE LAP DETAIL

NOTE:
Do not under any circumstances step or walk on surface of skylight. If foot traffic is necessary over skylight, use walk boards that are properly supported by building purlins. Placing of **"DANGER DO NOT WALK"** markings on every skylight must be done without fail. **Safety first!**

Technical information contained herein is subject to change without notice.

5.22 TAPE SEALANT APPLICATION AT RIDGE FLASHING

Apply panel sidelap tape sealant as shown for building with ridge flashing and outside closures. The mastic is placed along the inside edge of the major rib from the ridge purlin web line to the upper end of the panel.

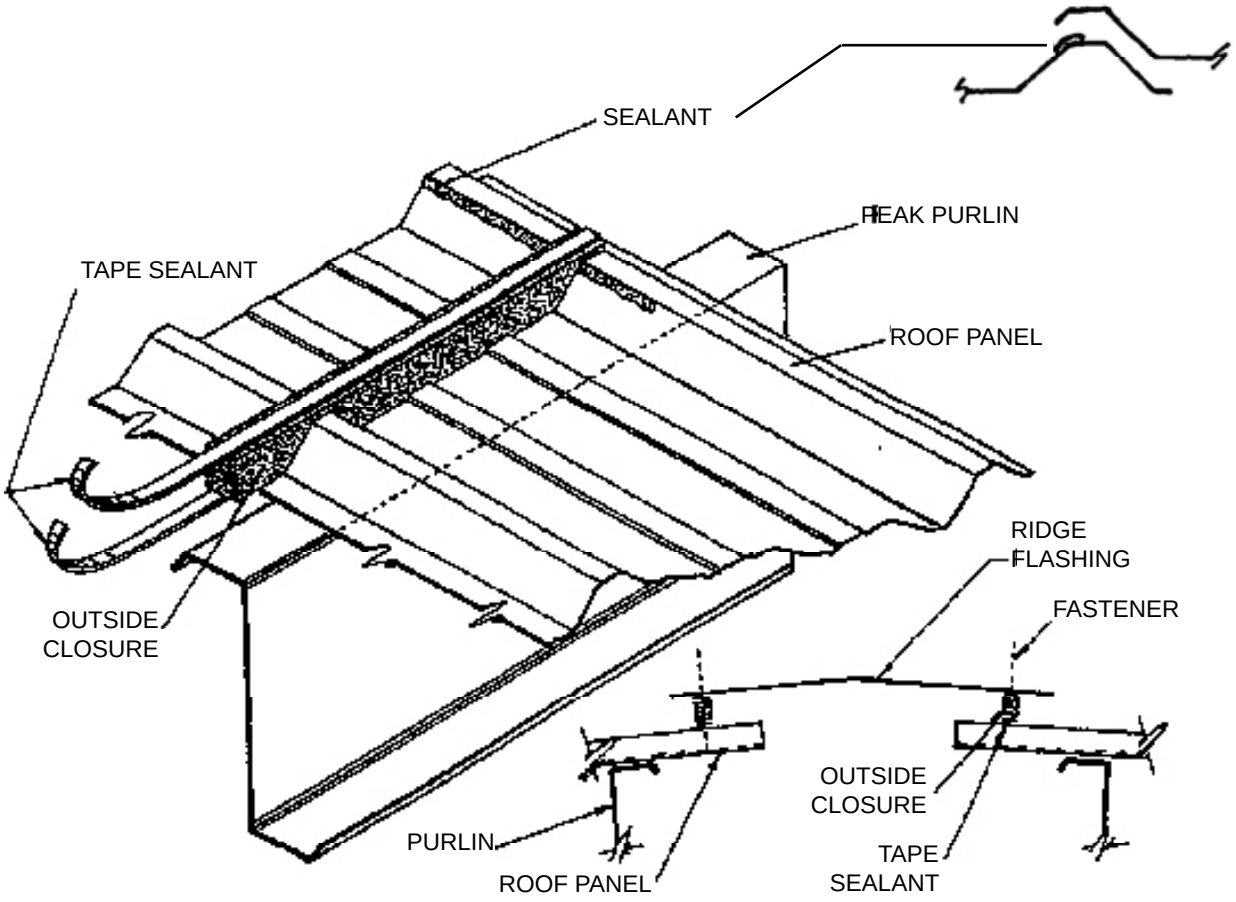

RIDGE FLASHING DETAILS

6.0 FLASHING, GUTTER AND TRIM

The correct installation of flashing, gutters, and trim cannot be overemphasized. The overall appearance of the finished building depends primarily on the quality of the installation of the flashing, gutters and trim. Keep all gutter and flashing lines straight. Make all bends sharp and neat. Be sure edges are not jagged, dented, crimped, or serrated. End joints and laps must be closely controlled.

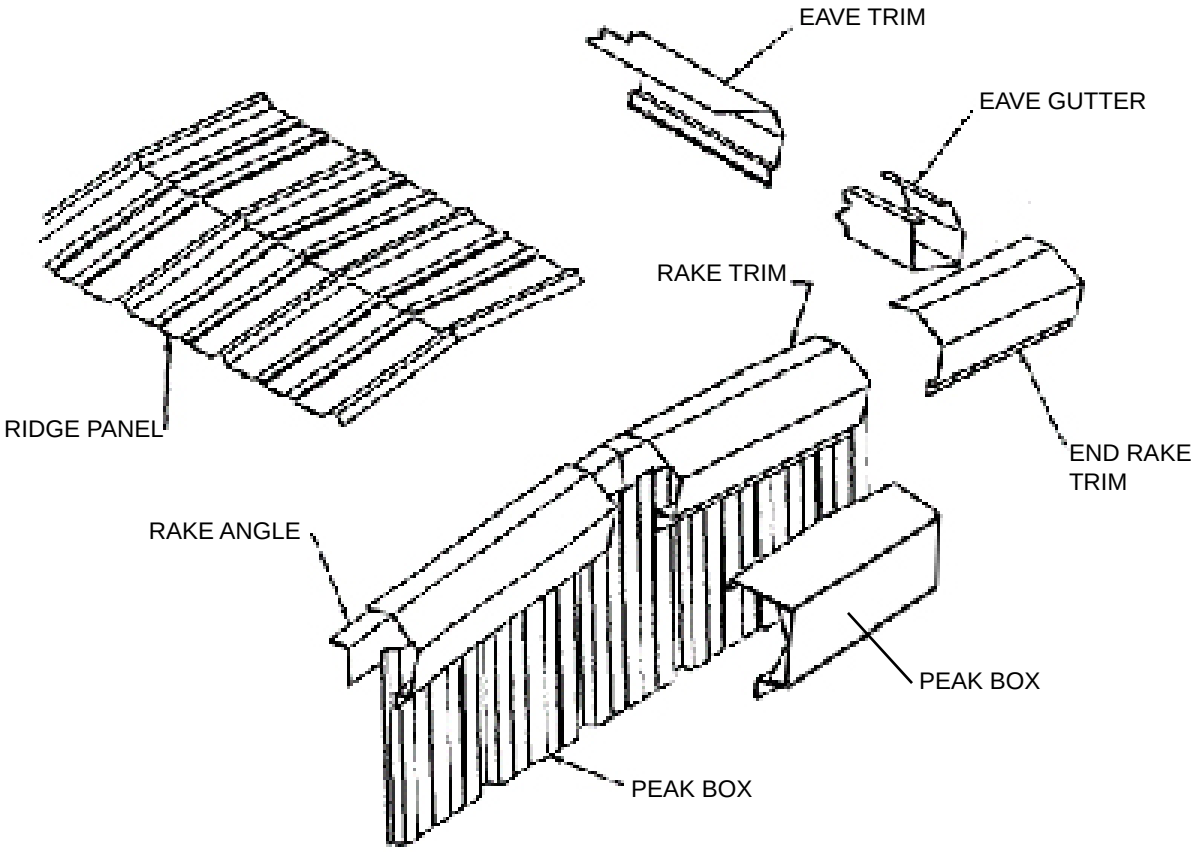

NOTE:
Flashing should be stored off the ground to avoid moisture and handling damage. Elevate one end of the package above the lower end to encourage drainage in case of rain. Always wear gloves when handling sheet metal. **Safety Firstl**

Technical information contained herein is subject to change without notice.

6.1 GUTTER INSTALLATION

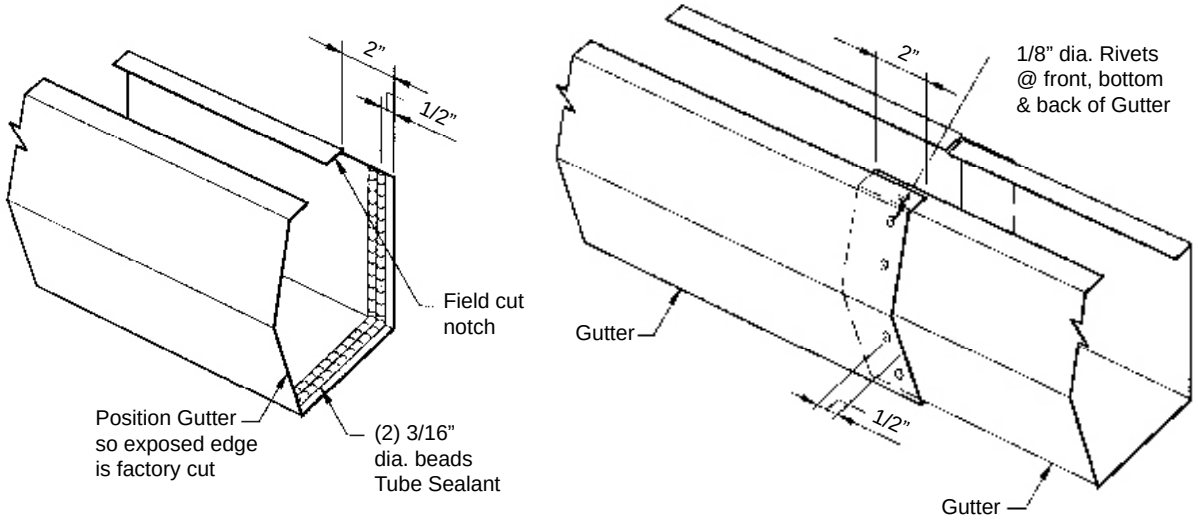

EAVE GUTTER SPLICE

Layout the gutter assemblies before installation on the roof. Start and finish the gutter ends as shown on next page.

Lift the gutter assembly into position under the edge of the roof panels and temporarily clamp the back flange of panel to the gutter. Position the back face of the gutter assembly flush against the panel cap trim and position its ends flush with the exterior face of the rake wall. Fasten the gutter's back flange to the underside of the roof panel with the lap fasteners, as shown. Check that the lap fasteners are securely engaged into the gutter's back flange.

Align the outer edge of the gutter straight and level. Use a string line to assure that the gutter is straight Install the gutter straps and fasten to the roof panel with stitch screw and fasten the gutter's outer flange to the end of the gutter strap with a pop rivet, as shown.

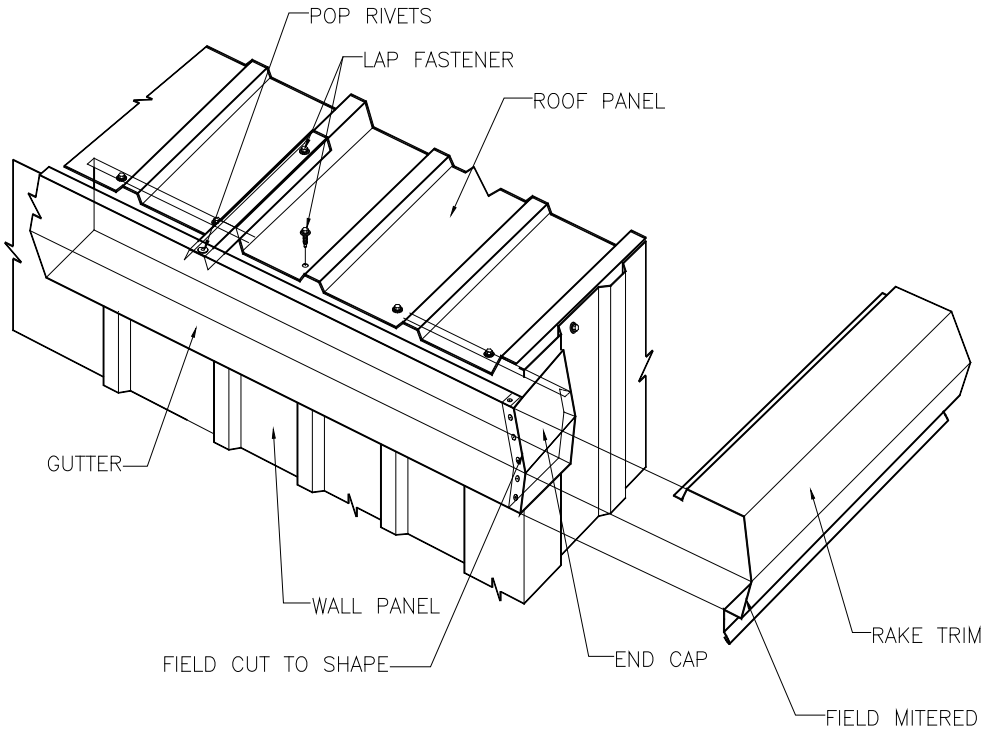

NOTE:
Workers should always use gloves when handling flashing and follow all **OSHA** safety recommendations. Never install any material if its quality or appropriateness is in question! RIGID manufactures various trim profiles - the examples shown may or may not match building in question. **Safety first!**

Technical information contained herein is subject to change without notice.

6.2 RAKE TRIM & PEAK BOX INSTALLATION

Apply caulking to rake trim as shown below prior to finial installation. Rake Trim and/or Peak Box should lap over rake trim a minimum of 2 inches. Attach to wall panel with #10 fasteners using an outside closure to seal box at the wall. Attach box to roof with #14 roof fasteners and stitch to trim with blind rivets as shown. Seal the connection at the roof panel with 1/8" tape sealant (drill 1/4" diameter clearance holes through plastic for fasteners to prevent cracking).

Splice rake trim with pop rivets at peak box and seal all rake trim laps with sealant to assure a weather-tight seal.

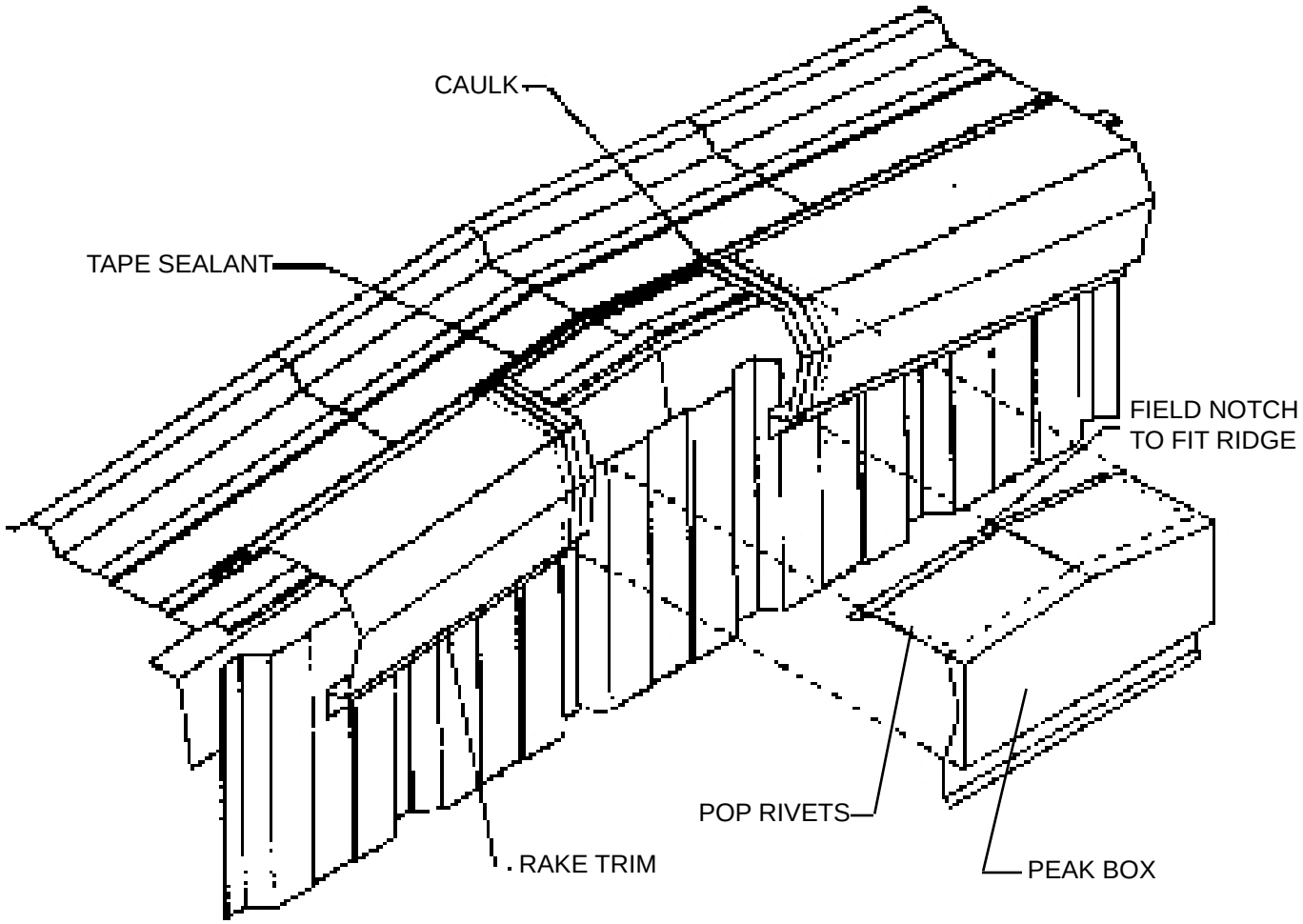

6.3 FLASHING CAULK AND LAP DETAILS

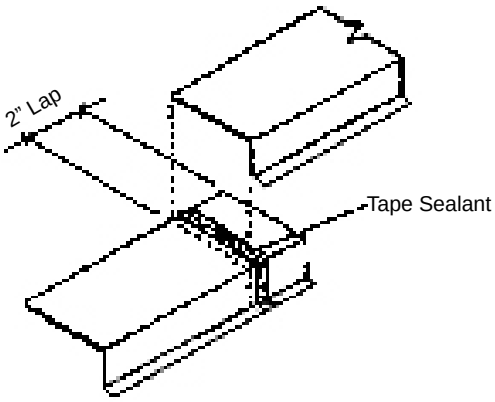

EAVE TRIM

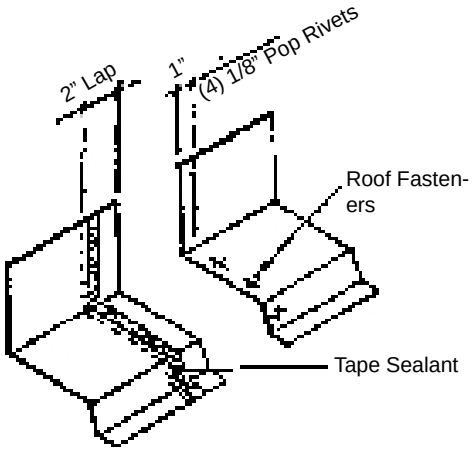

TRANSITION TRIM

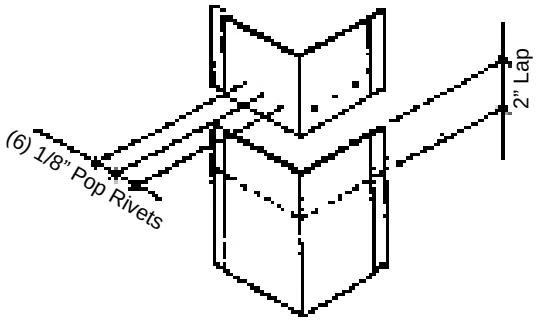

"AW" PANEL CORNER TRIM

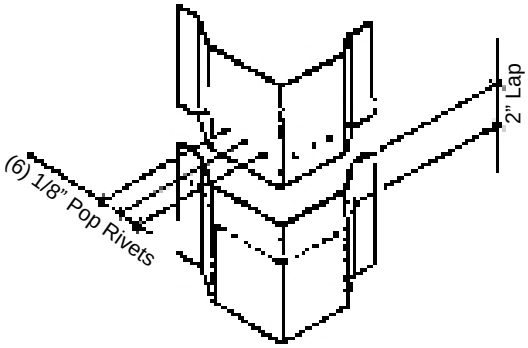

"R" PANEL CORNER TRIM

NOTE:
IMPACT BUILDING SYSTES manufactures a wide variety of flashing configurations. The examples shown are meant to impress upon the erector the importance of sealants and fasteners at flashinglaps.Consult Manufacture for any questionable details. **SAFETY FIRST!**

Technical information contained herein is subject to change without notice.